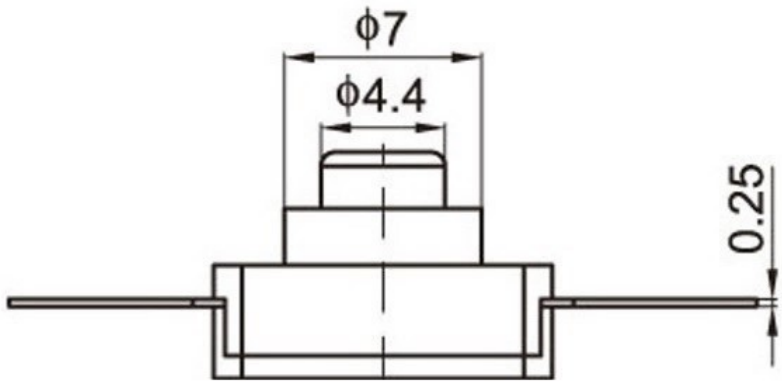


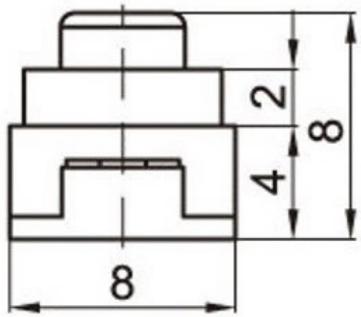


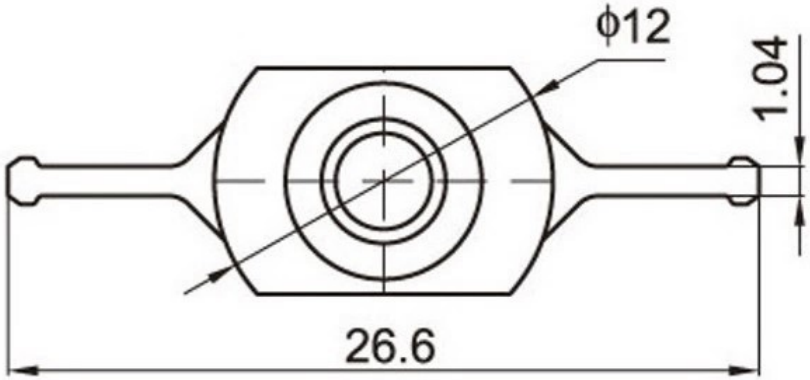


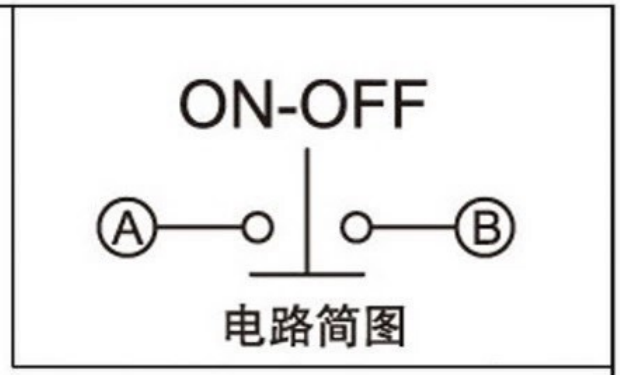


注："*"□表示关键尺寸(3个).

| NO. | PARTS | MATERIALS | Q'TY | |
|---|---|---|---|---|
| 8 | | | | |
| 7 | | | | |
| 6 | | | | |
| 5 | SPRING | SUS | 1 | NATURAL |
| 4 | CAM STICK | SUS | 1 | NATURAL |
| 3 | CASE | PA66/BRASS STRIP | 1 | GREY/Ag PLATED |
| 2 | COVER | PA66 | 1 | BLACK |
| 1 | KNOB | PA66/PBS C5210R-EH | 1 | WHITE/Ag CLAD |

| TOLERANCE UNLESS SPECIFIED | | | | |
|---|---|---|---|---|
| WITHIN 1.5mm : ±0.1mm | A | 2012-8-13 | 初 版 | |
| OVER 1.5mm : ±0.2mm | ISSUE | DATE | DESCRIPTIONS OF REVISION | APPD. |
| TITLE : VERTICAL PUSH SWITCH | | | UNIT : mm | DRWG NO.: |
| MODEL: | | | SCALE: 5:1 | DWN. 2012-8-13 |
| 广东科斯达开关厂 | | | | CHK'D / APPD. 2012-8-13 |