ZONE	SYMBOL	REVISION	APPROVAL	DATE

RoHS Compliant

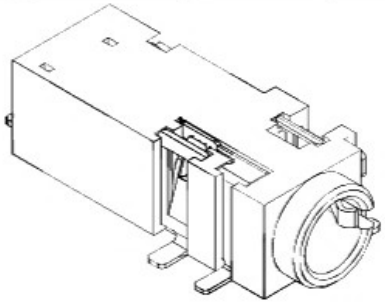

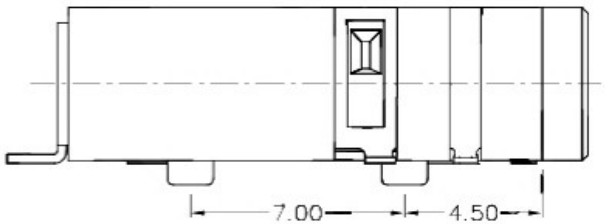

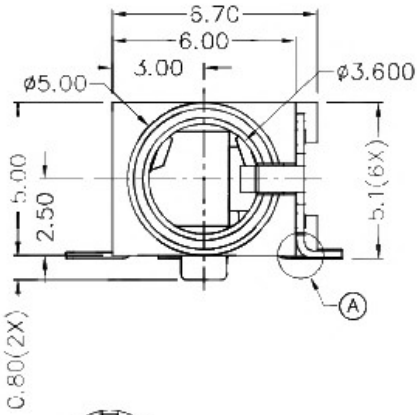

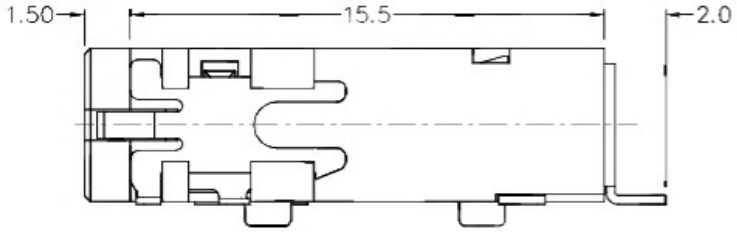

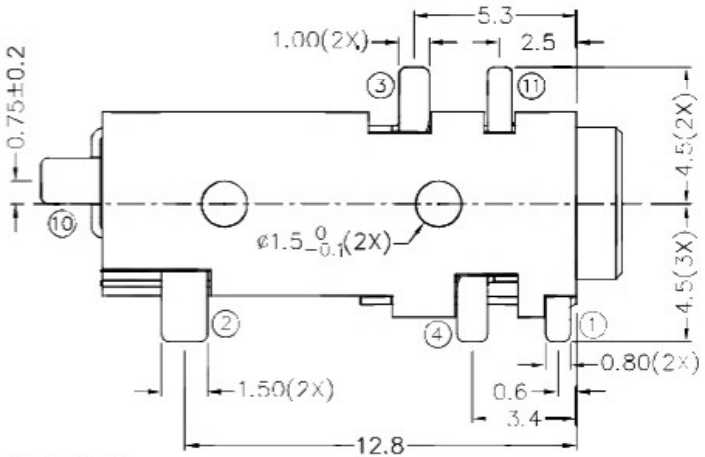

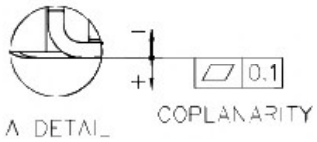

✱ MATERIAL

TERMINAL 1 : COPPER ALLOY
TERMINAL 2 : COPPER ALLOY
TERMINAL 3 : COPPER ALLOY
TERMINAL 4 : COPPER ALLOY
TERMINAL 10 : BRASS
TERMINAL 11 : COPPER ALLOY
HOUSING : HIGH TEMP. PLASTIC

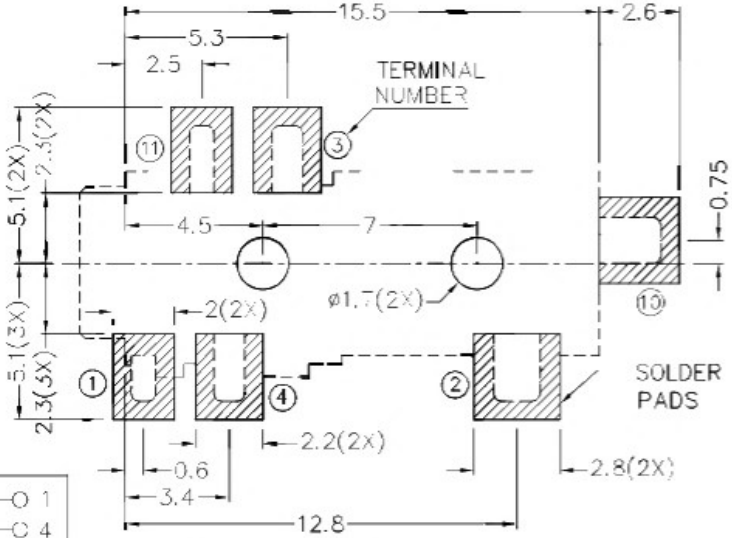

RECOMMENDED PCB LAYOUT
TOLERANCE: ±0.05
(TOP VIEW)

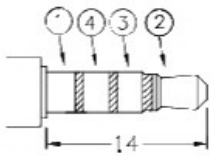

ø3.5 MATE PLUG

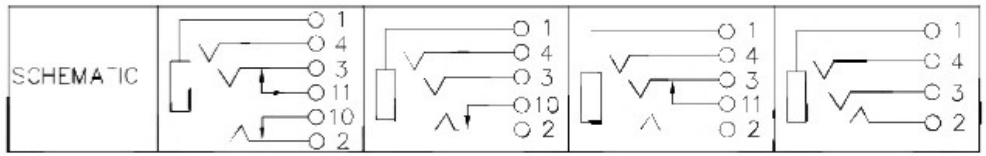

广东科斯达开关厂

				DESIGN	J.X.KUANG	DATE	3-5-2004	SCALE	4:1
				DRAWING	T.Y.L	DATE	23-12-2016	MATERIAL	✱
PART NAME	3.5mm SMD STEREO JACK	TOLERANCE UNLESS OTHERWISE SPECIFIED:	0.0±0.2 0.00±0.1 0.000±0.05	UNIT: mm	CHECK	H.L.TAN	DATE	23-12-2016	DWG. NO.	T7\SH375-A/1.0
PART NO.					APPROVAL		DATE		SHEET	