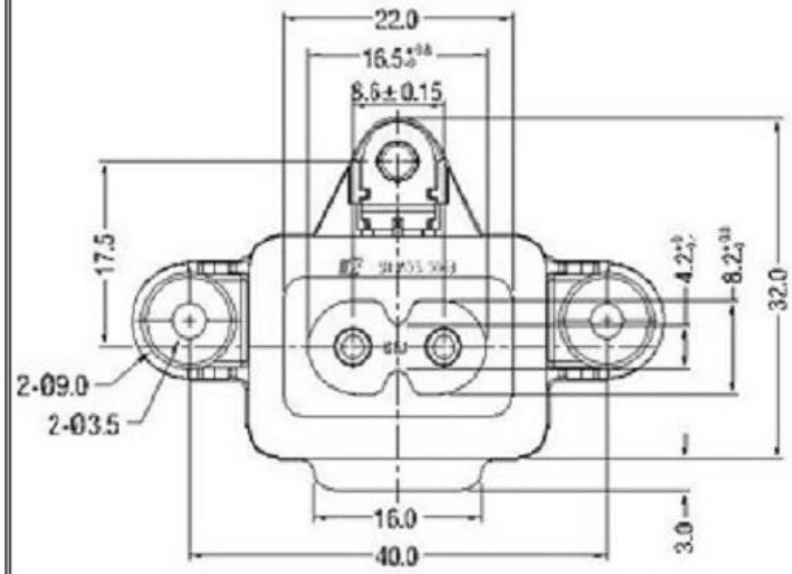


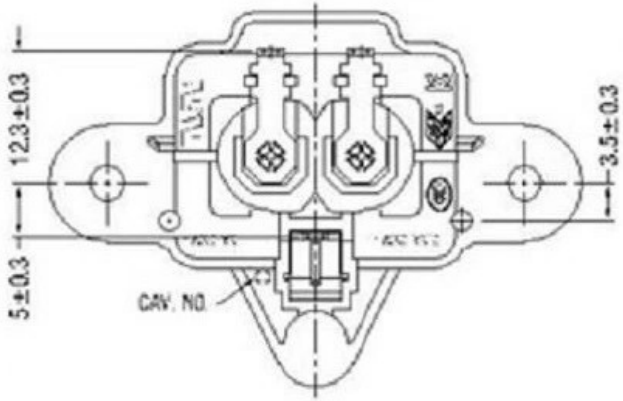


## SPEC:

A:Material:

1. Housing: PBT / PA66 UL94 V-0
2. Terminal: COPPER ALLOY & Fe, TIN PLATED

B.Electrical Characteristics:

1.Rating: 5A 250V~ (UL,CUL)
2.5A 250V ~ (CCC,ENEC,KC)

2.Electric Strength: AC 2,000 V FOR ONE MINUTE

3.Insulation Resistance: 100MΩ MIN, AT 500V DC

C.Approvals:

UL, CUL, CCC, ENEC, KC

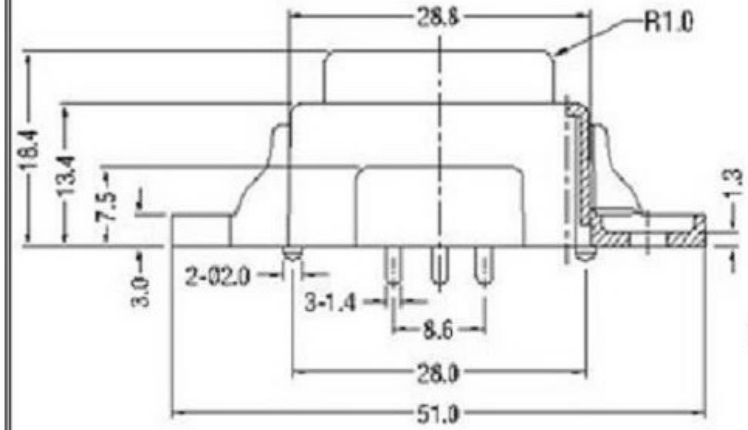


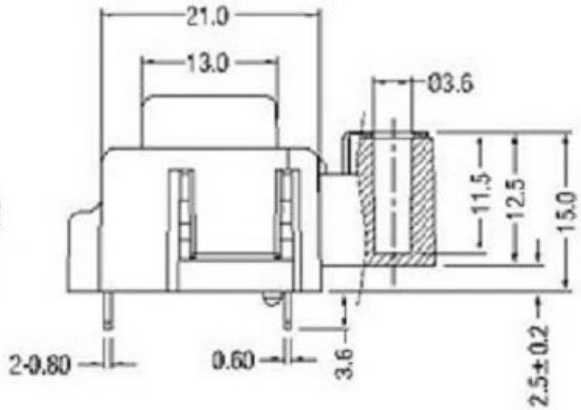


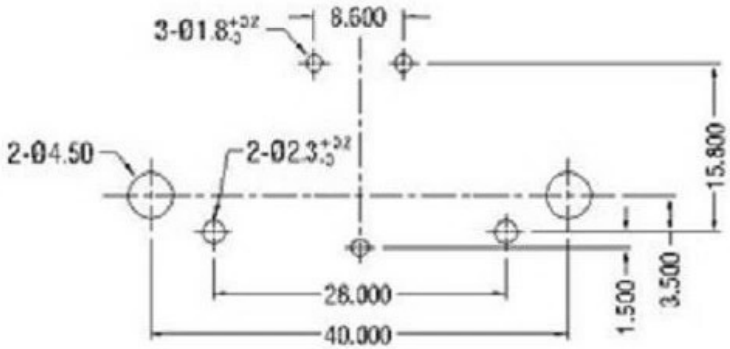


PCB LAYOUT

| | | | | | | | | | | | |
|---|---|---|---|---|---|---|---|---|---|---|---|
| | | | | 普通公差 COMMON TOLERANCE : | | 广东科斯达电子科技有限公司 Guang dong Keside Electronic Technology Co., Ltd. | | | | | |
| | | | | UP TO 5 | ±0.20 | 单位 UNIT | mm | 投影 PROJECTED | | 品名 PRODUCT NAME | AC power socket |
| | | | | ABOVE 5 TO 30 | ±0.30 | 绘图 DRAWN BY | 林晓良 | 核对 CHECKED BY | 张平 | 型号 MODEL NO. | |
| | | | | ABOVE 30 | ±0.50 | | | | | | |
| REV. | DATE | REVISION DESCRIPTION | ISSUE | ANGULAR | ±5° | 日期 DATE | 19.08.12 | 核准 APPROVAL BY | 周培雷 | 料号 PART NO. | KSD-AC JACK |