1、FUNCTION: OFF-ON

2、RATING: UL: 20(8)A 125/250VAC 25T125/55 5E4
CQC/KC: 16(4)A 250VAC T105
ENEC VDE: 16(4)A 250VAC T105/55

3、OPERATION FORCE: 700±300g.f

4、CONTACT RESISTANCE: ≤ 50 mΩ

5、INSULATION RESISTANCE: ≥ 100 MΩ

6、DIELECTRIC WITHSTAND:
TERMINAL TO BUTTON 3000VAC/5mA/1MINTUE
TERMINAL TO TERMINAL 1500VAC/5mA/1MINTUE

7、CIRCUIT DIAGRAM:

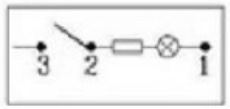

8、SUGGESTED PANEL HOLE SIZE:

PANEL THICKNESS	DIM. X
0.75~1.25	30.1
1.25~2.0	30.3
2.0~3.0	30.6

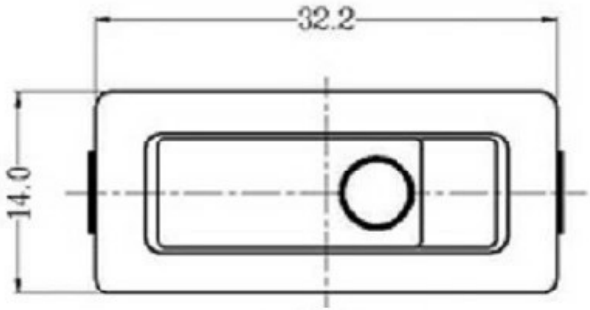

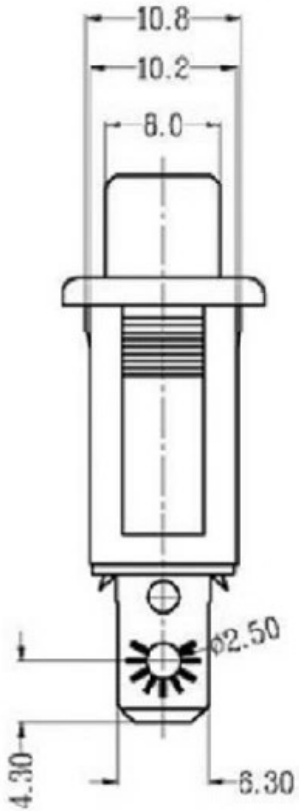

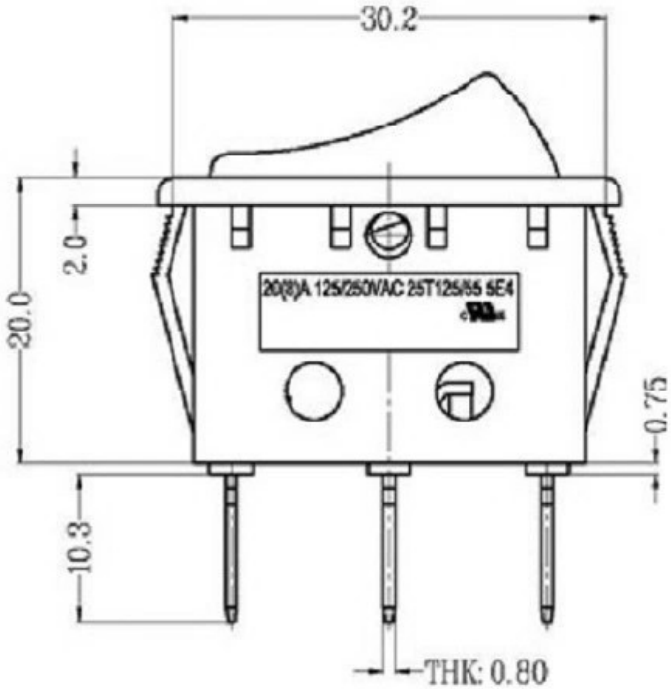

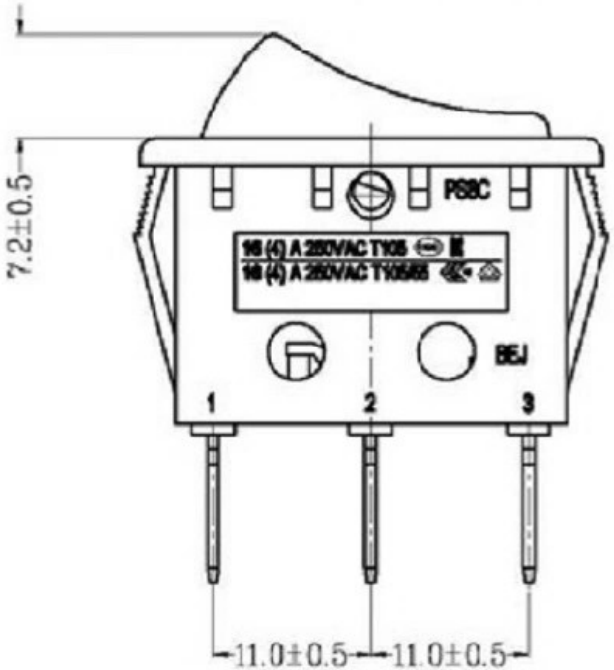

PANEL CUT-OUT

A4				普通公差: COMMON TOLERANCE :		广东科斯达电子科技有限公司 Guang dong Keside Electronic Technology Co., Ltd.						
A3												
A2				UP TO 5	±0.20	单位 UNIT	mm	投影 PROJECTED		品名 PRODUCT NAME	跷板开关	比例 SCALE	Free
A1				ABOVE 5 TO 30	±0.30	绘图 DRAWN BY	周金勇	核对 CHECKED BY	梁金勇	型号 MODEL NO.		
				ABOVE 30	±0.50							
REV.	DATE	REVISION DESCRIPTION	ISSUE	ANGULAR	±5°	日期 DATE	2015.8.17	核准 APPROVAL BY	周培雷	图号 DWG NO.	KSD-AC SWITCH	