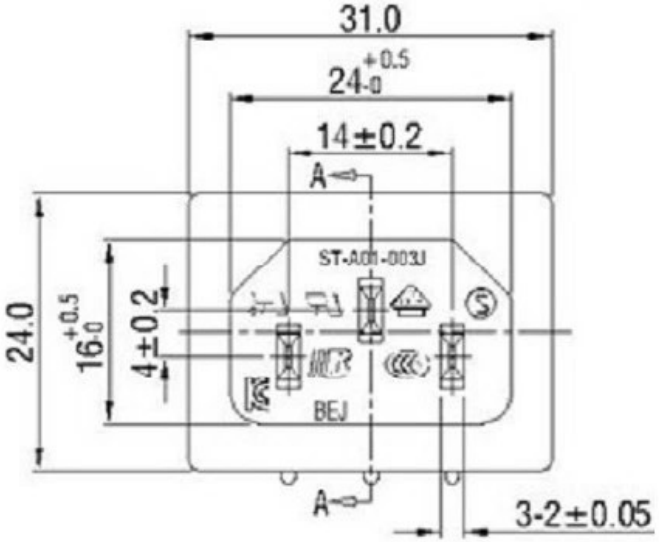

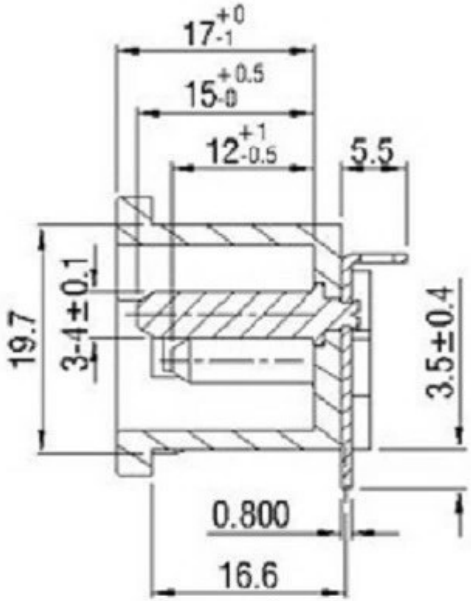

SECTION:A-A

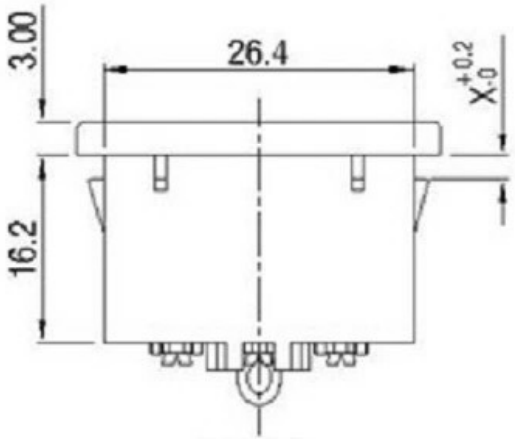

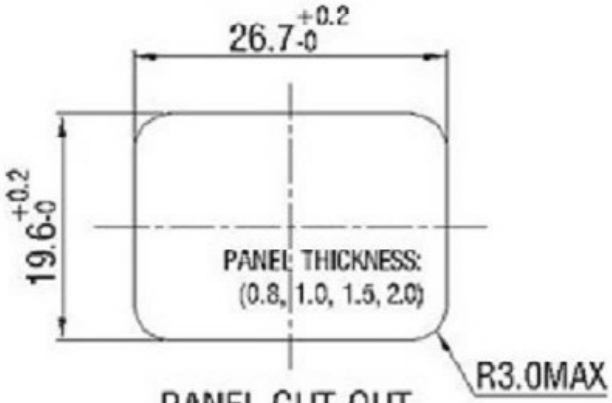

PANEL CUT-OUT

Part No.:	DIM. X
ST-A01-003JYT-S33(0.8HP)	0.9
ST-A01-003JYT-S33(1.0HP)	1.1
ST-A01-003JYT-S33(1.5HP)	1.6
ST-A01-003JYT-S33(2.0HP)	2.1

SPEC:

A. Material:

1. Housing: PA66
2. Terminal: COPPER ALLOY, TIN PLATED

B.Electrical Characteristics:

1.Rating: 15A 250V~ (UL,CUL)
10A 250V~(CCC,VDE,SEMKO)

2.Electric Strength: AC 2,000 V FOR ONE MINUTE

3.Insulation Resistance: 100MΩ MIN, AT 500V DC

C.Approvals:

UL, CUL, CCC, VDE, SEMKO,KC

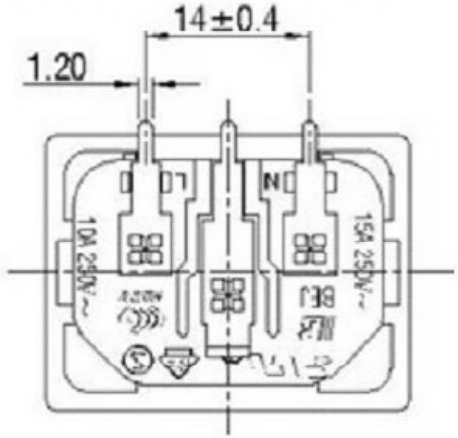

REV.	DATE	REVISION DESCRIPTION	ISSUE

普通公差
COMMON TOLERANCE :

UP TO 5	±0.20
ABOVE 5 TO 30	±0.30
ABOVE 30	±0.50
ANGULAR	±5°

广东科斯达电子科技有限公司
Guang dong Keside Electronic Technology Co., Ltd.

单位 UNIT	mm	投影 PROJECTED		品名 PRODUCT NAME	AC power socket
绘图 DRAWN BY	林晓良	核对 CHECKED BY	张平	型号 MODEL NO.	
日期 DATE	19.08.12	核准 APPROVAL BY	周培雷	料号 PART NO.	KSD-AC JACK