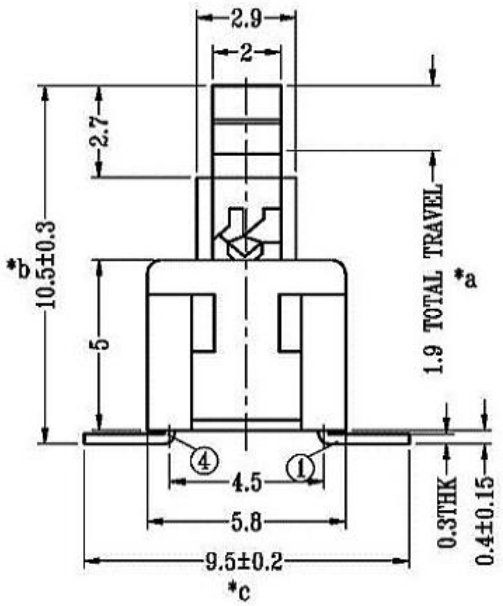

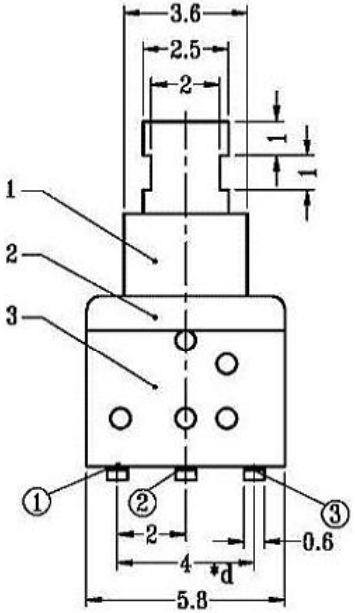

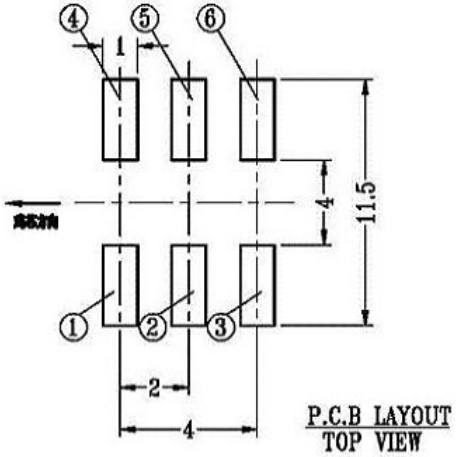

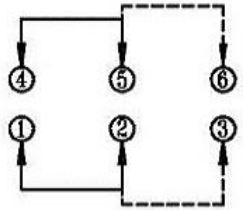

SCHEMATIC (NON-SHORTING)

SPECIFICATIONS

(1)LIFE TEST:10000cycles at a speed of 15-18cycles
(2)CONTACT RESISTANCE:100mΩmax
(3)INSULATION RESISTANCE:100MΩmin
(4)DIELETRIC STRENGTH:250V AC FOR 1MIN
(5)OPERATING TEMPERATURE:-16°C-+60°C
(6)RATING: 0.1A 30V DC
(7)FUNCTION:2P2T
(8)TIMING:NON-SHORTING
(9)OPERATING FORCE:180gf±50gf

NO.	PARTS	MATERIALS	Q'TY	
8				
7				
6				
5	SPRING	SUS304	1	NATURAL
4	CAM STICK	SUS304	1	NATURAL
3	CASE	PA66/BRASS STRIP	1	GREY/Ag PLATED
2	COVER	PA66+15%F.G	1	BLACK
1	KNOB	PA66+15%F.G/PBS STRIP	1	BLACK/Ag CLAD

TOLERANCE UNLESS SPECIFIED
WITHIN 1.5mm : ±0.1mm
OVER 1.5mm : ±0.2mm

ISSUE	DATE	DESCRIPTIONS OF REVISION	APPD.
A	2016-10-14	初 版	

TITLE : VERTICAL PUSH SWITCH
MODEL:
UNIT : mm
SCALE: 5:1
DRWG NO.:

DWN.		2016-10-14
CHK'D		2016-10-14
APPD.		

台灣科斯達電器開關廠
KOSOD SWITCH FACTORY