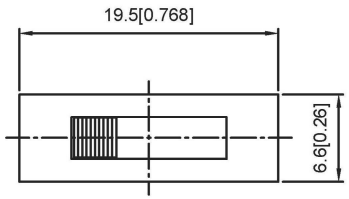

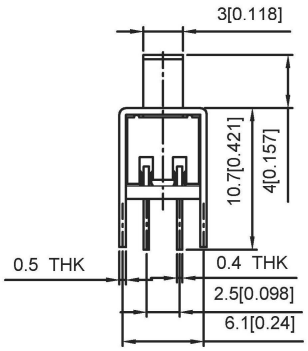

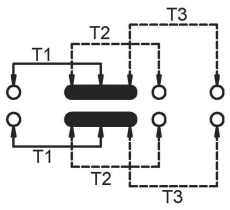

SCHEMATIC

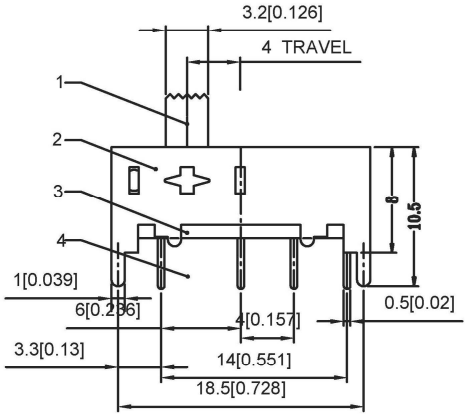

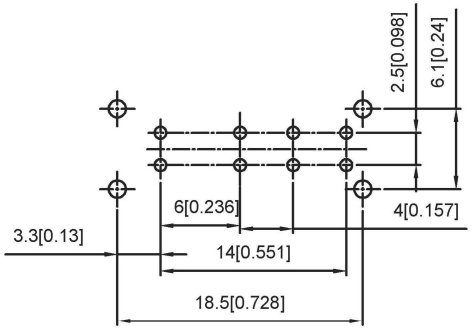

PCB LAYOUT
BOTTOM VIEW

SS23H37- X

L(MM)
2 ~10

4	Terminal	8	Brass(0.30t)	ag Plated
3	Base	1	Phenolic Resin	
2	Cover	1	SUS	Natural
1	Keystake	1	Pa66	Black

RATING	0.3A 50V DC
CIRCUIT	2P4T
CONTACT RESISITANCE	100MΩ MAX
TRAVEL	4MM
OPERATING FORCE	250±100gf
OPERATING LIFE	10000

				ANGLAR	±5°
				L≤ 4	±0.2
				4<L≤ 16	±0.3
				16<L≤ 63	±0.4
	DATE	REVISED	APPROVED	L> 63	±0.5
REVISIONS				UNSPECIFIED TOLERANCES	

WWW.BODONGKAIGUAN.NET WWW.CKJACK.COM WWW.KSDKG.COM

KSD SWITCH CONNECTOR

KE SI DA ELECTRONIC TECHNOLOGY CO., LTD

DSND		SCALE: N/A	MODEL TYPE: SLIDE SWITCH
DWN		VIEW:	PART NO.: SS23H37X
CHKD		UNIT: mm/in	DWG NO.:
APPD		SIZE: A4	

WEIGHT	SHEET	REVISION
	1/1	A0