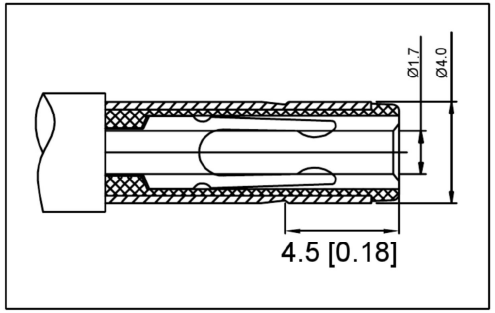

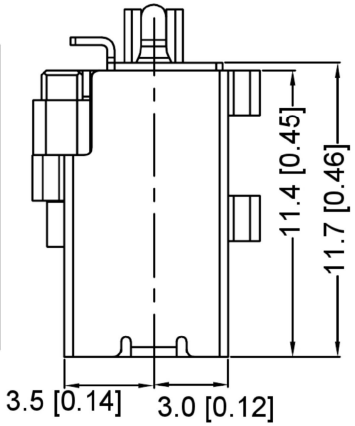

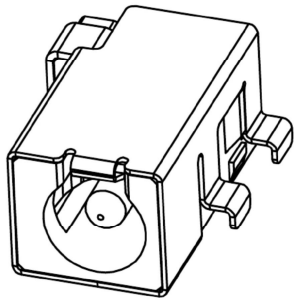

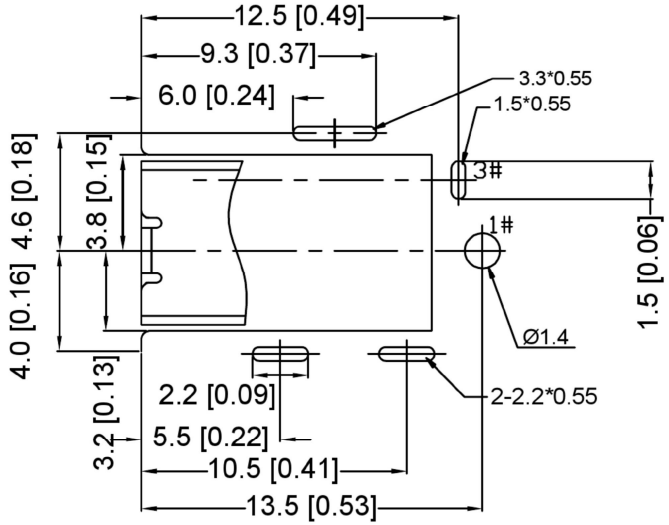

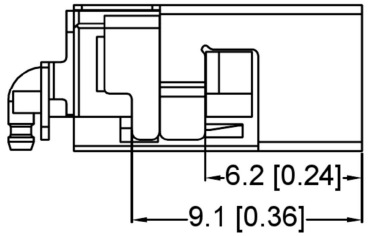

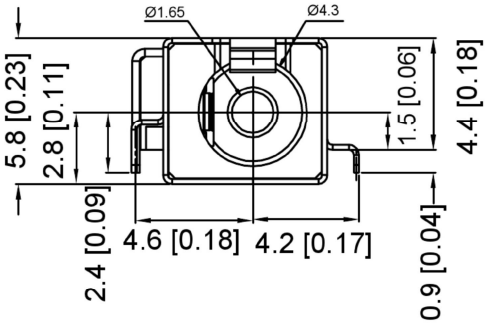

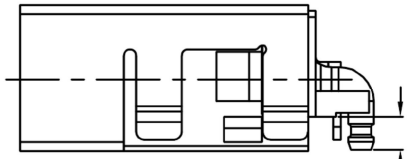

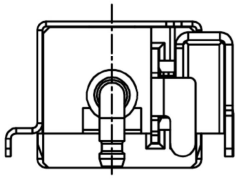

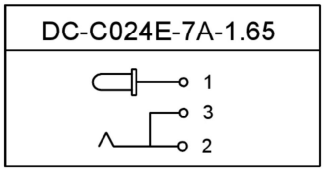

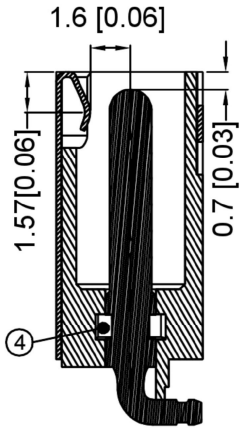

SECTION B-B

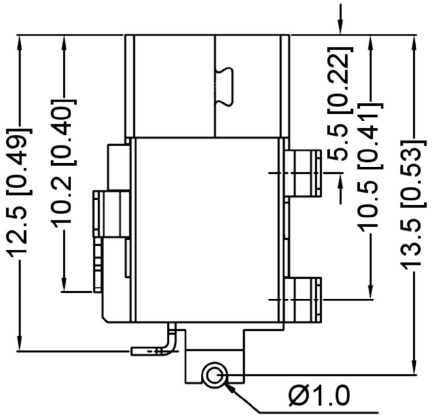

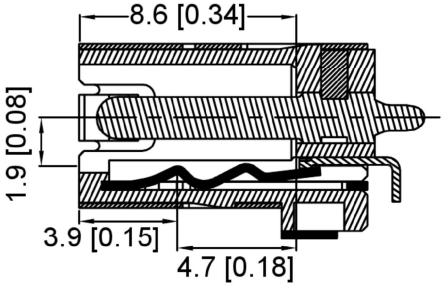

SECTION A-A

SPECIFICATION
1.Rating : DC 20V 7A;
2.Contact resistance: 0.03Ω;
3.Insulation resistance: ≥100MΩ (DC250V);
4.Withstand voltage;500VAC
5.Insertion and extraction force:5-30N;
6.life test:5000 cycles.
7.PLUG插入后上下左右4个方向无瞬断现象。

	MATERIAL	PLATING
center pin	Brass	tin
coat	Sus	
terminal 1	Phosphor Bronze	tin
terminal 2	Phosphor Bronze	tin
terminal 3	Phosphor Bronze	tin
plastic	Pa9t	

				ANGLAR	±5°
				L≤ 4	±0.2
				4<L≤ 16	±0.3
				16<L≤ 63	±0.4
	DATE	REVISED	APPROVED	L> 63	±0.5
REVISIONS				UNSPECIFIED TOLERANCES	

WWW.BODONGKAIGUAN.NET WWW.CKJACK.COM WWW.KSDKG.COM

KSD SWITCH CONNECTOR

KE SI DA ELECTRONIC TECHNOLOGY CO., LTD

DSND		SCALE: N/A	MODEL TYPE: DC POWER JACK
DWN		VIEW:	PART NO.: DC-C024E-7A-1.65
CHKD		UNIT: mm/in	DWG NO.:
APPD		SIZE: A4	

WEIGHT	SHEET	REVISION
	1/1	A0