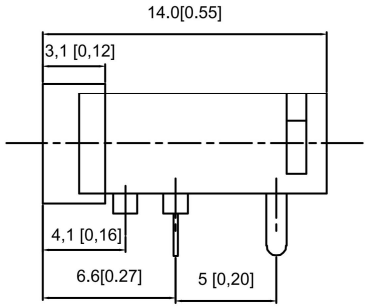

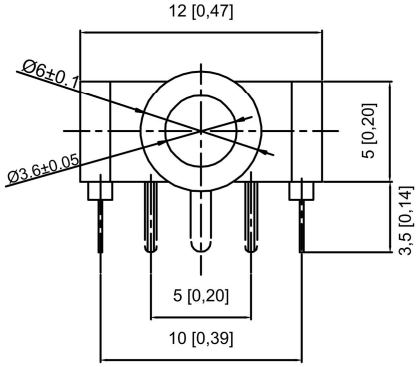

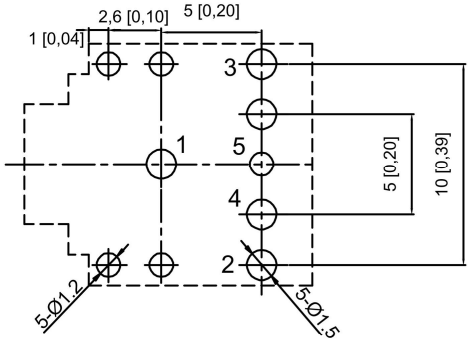

PCB LAYOUT TOP VIEW

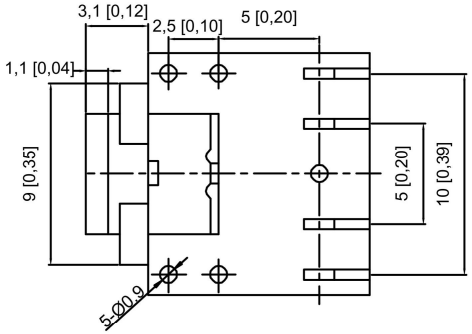

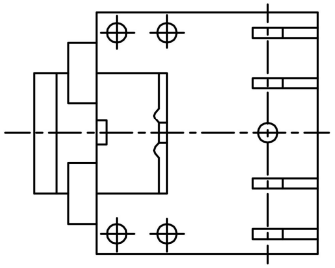

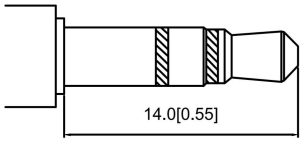

Ø 3.5 MATING PLUG

Model No.	PJ-307N3	PJ-307N4	PJ-307N5
Schematic	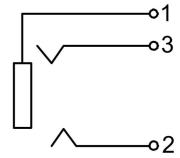	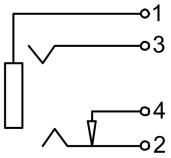	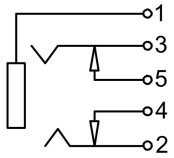
PIN			
1	sleeve	sleeve	sleeve
2	tip	tip	tip
3	ring	ring	ring
4	NP	tip switch	tip switch
5	NP	NP	ring switch

	MATERIAL	PLATING
terminal 1	Phosphor Bronze	tin
terminal 2	Phosphor Bronze	tin
terminal 3	Phosphor Bronze	tin
terminal 4	Brass	tin
terminal 5	Brass	tin
plastic	Pbt	

				ANGLAR	±5°
				L≤ 4	±0.2
				4<L≤ 16	±0.3
				16<L≤ 63	±0.4
	DATE	REVISED	APPROVED	L> 63	±0.5
REVISIONS				UNSPECIFIED TOLERANCES	

WWW.BODONGKAIGUAN.NET WWW.CKJACK.COM WWW.KSDKG.COM

KSD SWITCH CONNECTOR

KE SI DA ELECTRONIC TECHNOLOGY CO., LTD

DSND		SCALE: N/A	MODEL TYPE: 3.5 PHONE JACK
DWN		VIEW:	PART NO.: PJ-307NX
CHKD		UNIT: mm/in	DWG NO.:
APPD		SIZE: A4	

WEIGHT	SHEET	REVISION
	1/1	A0