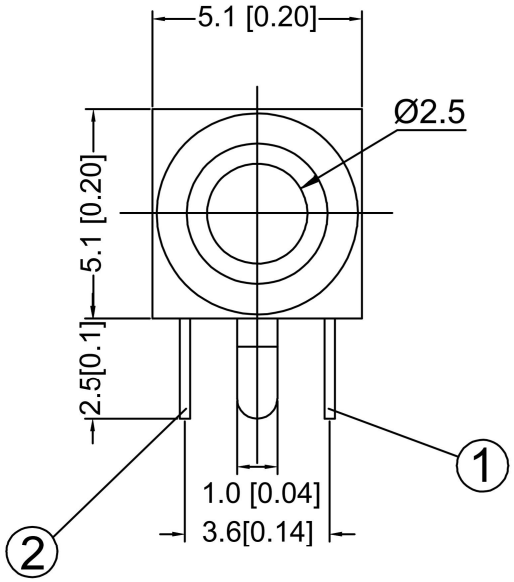

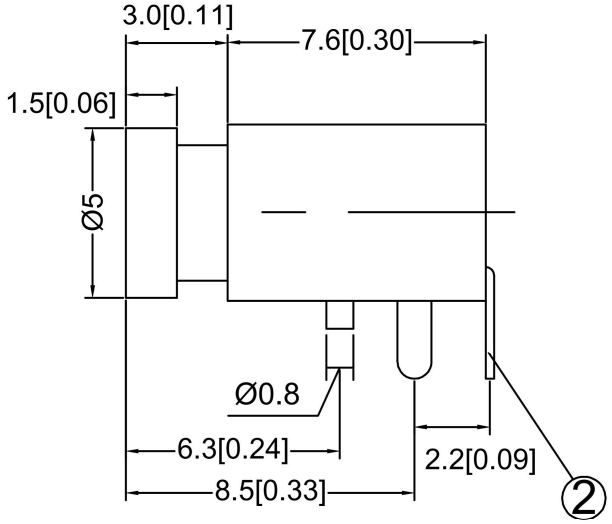

Specifications:
Voltage rating:30V AC/DC
Current rating:0.5 A AC/DC
Withstanding voltage: 500V AC/minute
Temperature range:-40° ~+55
Insulation resistance:≥100MΩ

PIN	PJ-210
Schematic	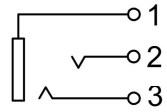

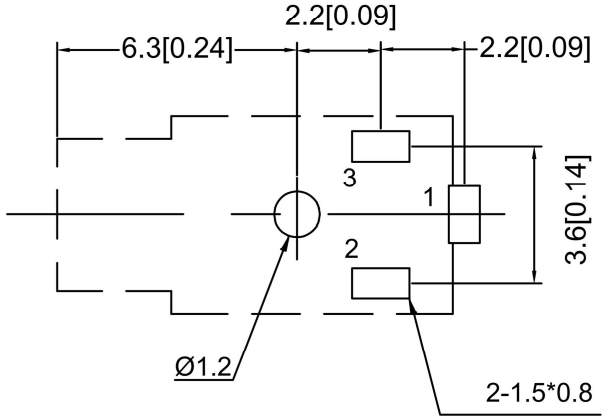

	MATERIAL	PLATING
terminal 1	Brass	AG
terminal 2	Phosphor Bronze	AG
terminal 3	Phosphor Bronze	AG
plastic	PA66	
Axle sleeve	Brass	Au

				ANGLAR	±5°
				L≤ 4	±0.2
				4<L≤ 16	±0.3
				16<L≤ 63	±0.4
	DATE	REVISED	APPROVED	L> 63	±0.5
REVISIONS				UNSPECIFIED TOLERANCES	

WWW.BODONGKAIGUAN.NET WWW.CKJACK.COM WWW.KSDKG.COM

KSD SWITCH CONNECTOR

KE SI DA ELECTRONIC TECHNOLOGY CO., LTD

DSND		SCALE: N/A	MODEL TYPE: 2.5 PHONE JACK
DWN		VIEW:	PART NO.: PJ-210
CHKD		UNIT: mm/in	DWG NO.:
APPD		SIZE: A4	

WEIGHT	SHEET	REVISION
	1/1	A0