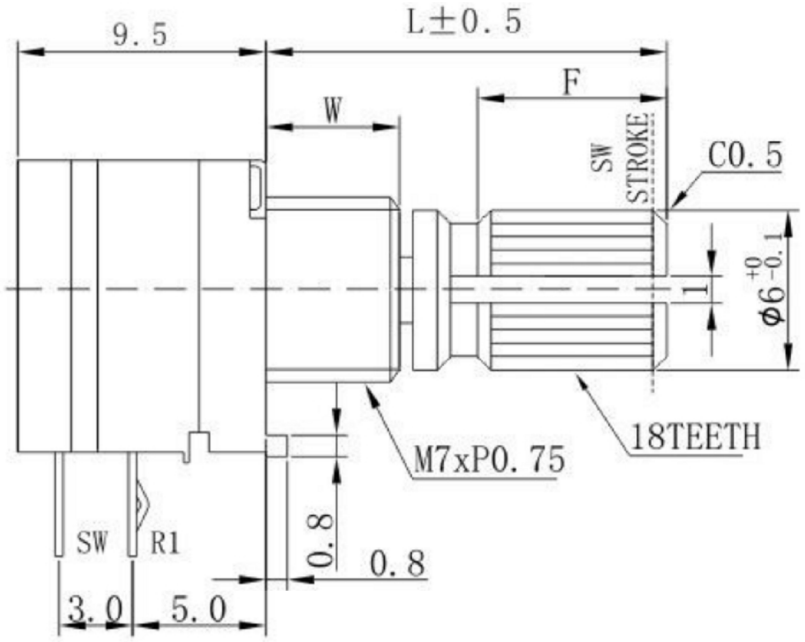

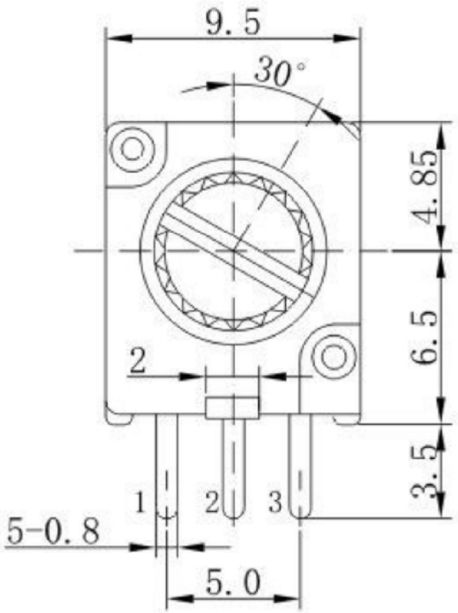

SHAFT SHOWN IN FULL
C.C.W. POSTITION

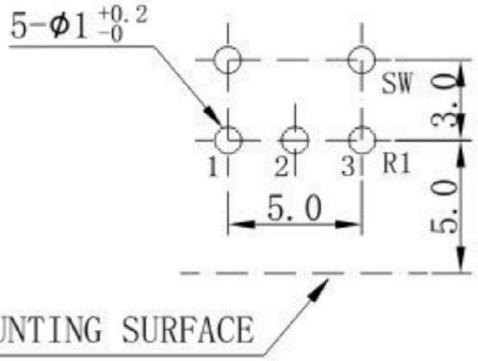

P.C.B MOUNTING HOLE DETAII

L	25	30	30
F	8	8	8
L1	15	20	15
F1	5	5	5

KSD SWITCH CONNECTOR

RV097 SERIES ROTARY POTENTIOMETERS
RV097 旋转电位器

Electrical characteristics 电气特性

Total Resistance Range 总阻值	500Ω≤TR≤1MΩ
Resistance Tolerance 总阻值容许公差	±20%
Resistance Taper 阻值线性	A,B,C taper.
Rating Power 额定功率	B taper : 0.05W ; Other taper : 0.02W
Slide Noise 杂讯	Less than 100mV
Residual Resistance Value 残留阻值	Less than 20Ω
Dielectric Voltage 耐电压	For 1 minute or more AC 250V
Insulation resistance 绝缘阻抗	More than 100MΩ at DC 250V
Tracking Error 同步误差	-40~0 dB ≤ ±3dB
Switch Contact Resistance 开关接触电阻	200mΩ Max

Mechanical characteristics 机械特性

Total Rotational Angle 旋转角度	300°±10°
Rotational Torque旋转力矩	20gf.cm~250 gf.cm
Number of click 段位数量	1CC,11CC,21CC,41CC
Click Torque段位力矩	100gf.cm~300 gf.cm
Stop Strength 止挡强度	4kgf.cm
Shaft Push & Pull Strength 轴推拉强度	10kgf.cm
Switch Rotation Angle 开关旋转角度	50°±10°
Switch Action 开关作动力	100~450gf.cm

Environmental characteristics

Rotational Life 旋转寿命	10,000 cycles

RV097 轴心规格

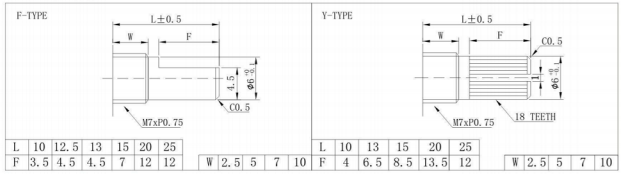

L	10	12.5	13	15	20	25
F	3.5	4.5	4.5	7	12	12

W	2.5	5	7	10

L	10	13	15	20	25	
F	4	6.5	8.5	13.5	12	

W	2.5	5	7	10

* 具体轴心规格，可依据客户需求订做。
Specific axis specifications can be customized according to customer needs.

ITEM NO.	DESCRIPTION	DRAWN	DATE
2	公差及料號更新	Jack	072313
1	圖面更新	Frank Wu	021012

广东科斯达电子科技有限公司
KSDKG Guang dong Keside Electronic Technology Co., Ltd.

TOLERANCE UNLESS OTHERWISE STATED : Up to 5 ±0.2; Above 5 ~ 15 ±0.3; Above 15 ~ 30 ±0.4; Above 30 ~ 50 ±0.5; Angle ±0.3°

3RD. ANGEL'S | UNITS | MM

DRAWN BY: Jack Lu	DATE 07/23/13	MAT'L	
CHECKED BY: Jacky Chen	DATE 07/23/13	FINISH	
APPROVED BY: Tony Kao	DATE 07/23/13	SCALE 1 : 1	SHEET NO. 1 of 1

TITLE	ROTARY POTENTIOMETER
MODLE	旋转电位器系列
DWG NO.	KSD-RV-0971N-STN
PART NO.	
SIZE	A4
VER	R2