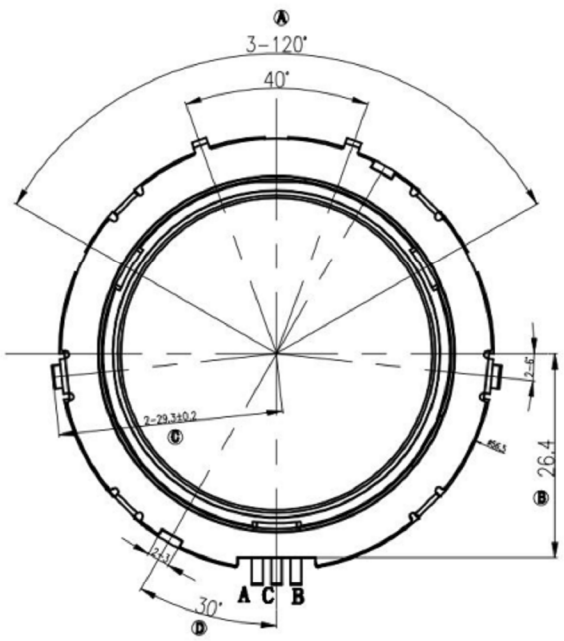

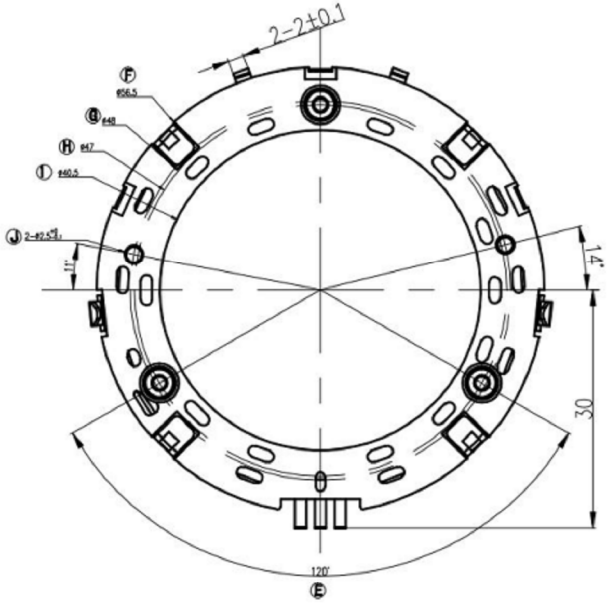

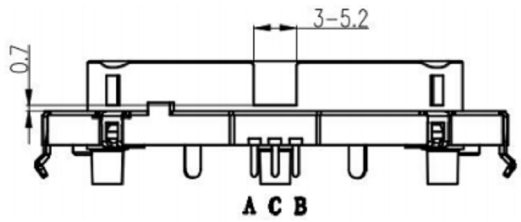

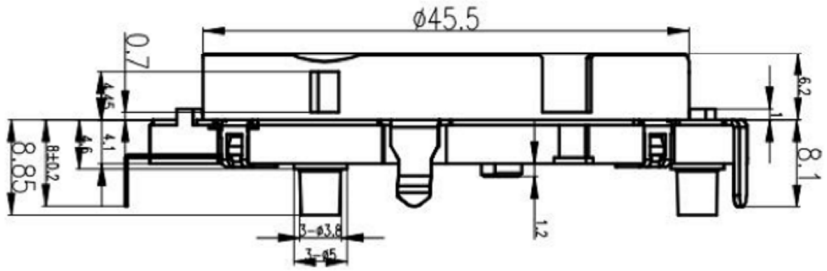

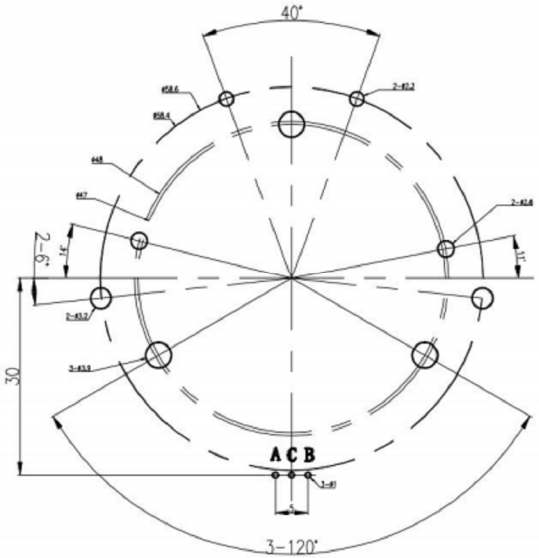

P.C.B MOUNTING HOLE DETAIL

EC25 EC28 EC35 EC43 ROTARY ENCODER
EC25 EC28 EC35 EC43 编码器

Electrical characteristics 电气特性

Rating Power 额定功率	DC5V			
Sliding Nosie(Bounce)滑动杂音	T2≤3ms			
Dielectric Voltage 耐电压	For 1 minute or more AC 110V			
Insulation resistance 绝缘阻抗	More than 10MΩ at DC 110V			
Resolution 分解能力	EC25	EC28	EC35	EC43
	10P & 20P	15P	15P	20P
Phase Difference 相位差	△T≥5MS			

Mechanical characteristics 机械特性

Total Rotational Angle 旋转角度	360°			
Rotational Torque 旋转力矩	50gf.cm~250 gf.cm			
Number of click 段位数量	Ec25	EC28	EC35	EC43
	10C & 20C	30C	30C	20C

Environmental characteristics

Rotational Life 旋转寿命	30,000 cycles

输出信号

轴的旋转方向 Shaft rotational direction	信 号 Signal	正向 Direction	反向 Reverse
顺时针方向 C.W.	A(A~C端子间) A(Terminal A~C)	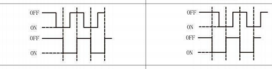	
逆时针方向 C.C.W.	B(B~C端子间) B(Terminal B~C)		

ITEM NO.	DESCRIPTION	DRAWN	DATE
2	公差及料號更新	Jack	072313
1	圖面更新	Frank Wu	021012

广东科斯达电子科技有限公司
KSDKG Guang dong Keside Electronic Technology Co., Ltd.

TOLERANCE UNLESS OTHERWISE STATED: Up to 5 ±0.2; Above 5 ~ 15 ±0.3; Above 15 ~ 30 ±0.4; Above 30 ~ 50 ±0.5; Angle ±0.3°

3RD. ANGEL'S

UNITS MM

DRAWN BY: Jack Lu	DATE 07/23/13	MAT'L	
CHECKED BY: Jacky Chen	DATE 07/23/13	FINISH	
APPROVED BY: Tony Kao	DATE 07/23/13	SCALE 1 : 1	SHEET NO. 1 of 1

TITLE	EC ENCODING SWITCH		
MODLE	EC编码开关系列		
DWG NO.	KSD-EC5601	SIZE	A4
PART NO.		VER	R2