DIMENSIONS

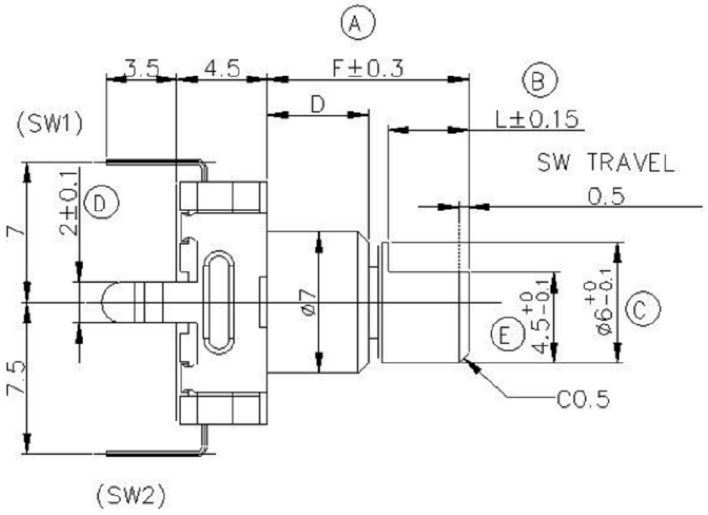

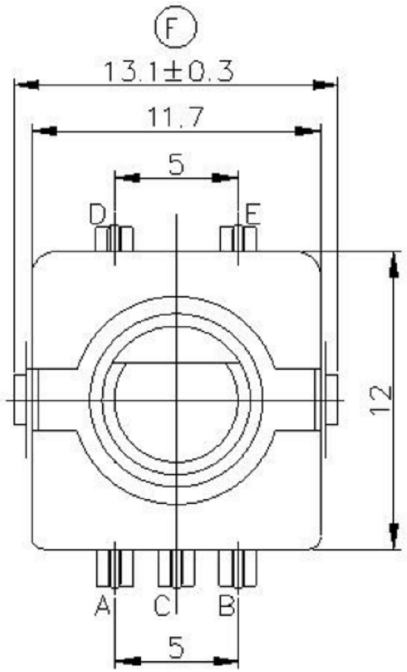

Electrical characteristics 电气特性	
Rating Power 额定功率	DC5V 10mA
Fluttering 振荡	T1,T3≤3ms
Sliding Nosie(Bounce)滑动杂音	T2≤2ms
Dielectric Voltage 耐电压	For 1 minute or more AC 300V
Insulation resistance 绝缘阻抗	More than 100MΩ at DC 250V
Phase Difference 相位差	ΔT≥0.08T
Mechanical characteristics 机械特性	
Total Rotational Angle 旋转角度	360°
Rotational Torque 旋转力矩	30gf.cm~200 gf.cm
Number of click 段位数量	30 Detents(Angle:12°±2°) 20 Detents(Angle:18°±2°)
Push-Pull Strength 轴推拉强度	10Kgf.cm Min for 10Sec
Bushing & nut tight strength 轴套锁紧强度	10.0Kgf Min
Switch Specifcations 开关特性	
Maximum Ratings 额定电压	DC5V 10mA(1mA Min)
Contact resistance 接触阻抗	200mΩ Max
Travel of switch 开关移动量	0.5+0.4/-0.3 mm OR 1.5+0.4/-0.3 mm
Operating force of switch 开关动作力	500±200gf
Environmental characteristics	
Rotational Life 旋转寿命	30,000 cycles
Switch Life 开关寿命	20,000 cycles

(SW02)CIRCUIT DIAGRAM

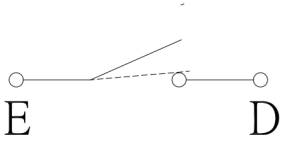

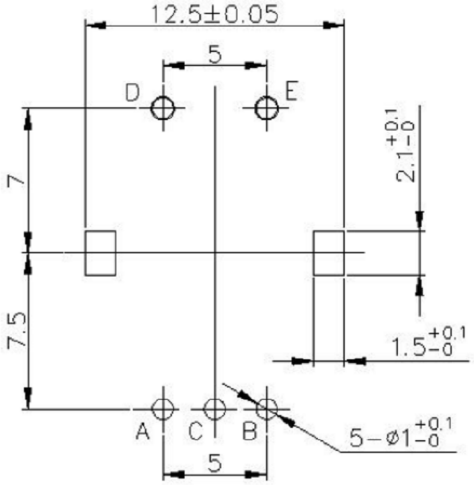

P.C.BOARD MOUNTING HOLE DIMENSIONS

(SW01) ENCODER

(SW02) PUSH ON SW

CLICK Position

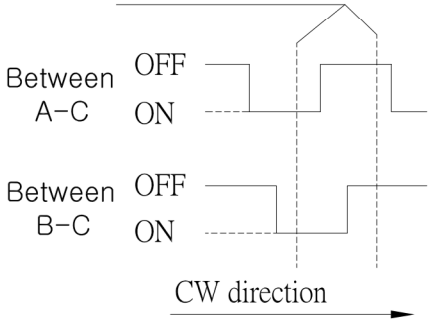

(SW01) OUTPUT

EC11 轴心轴套规格

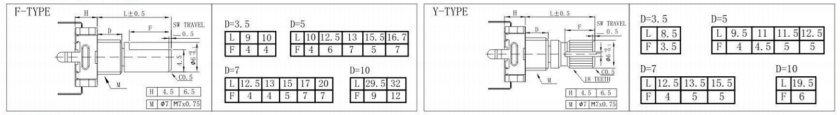

输出信号

轴的旋转方向 Shaft rotational direction	信号 Signal	正向 Direction	反向 Reverse
顺时针方向 C.W.	A(A~C端子间) A(Terminal A~C)	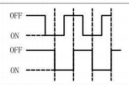	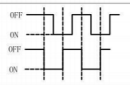
逆时针方向 C.C.W.	B(B~C端子间) B(Terminal B~C)	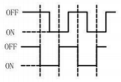	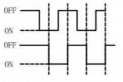

* 具体轴心规格，可依据客户需求订做。
Specific axis specifications can be customized according to customer needs.

ITEM NO.	DESCRIPTION	DRAWN	DATE
2	公差及料號更新	Jack	072313
1	圖面更新	Frank Wu	021012

广东科斯达电子科技有限公司
KSDKG Guang dong Keside Electronic Technology Co., Ltd.

TOLERANCE UNLESS OTHERWISE STATED: Up to 5 ±0.2; Above 5 ~ 15 ±0.3; Above 15 ~ 30 ±0.4; Above 30 ~ 50 ±0.5; Angle ±0.3°

3RD. ANGEL'S | UNITS MM

DRAWN BY: Jack Lu	DATE 07/23/13	MAT'L	
CHECKED BY: Jacky Chen	DATE 07/23/13	FINISH	
APPROVED BY: Tony Kao	DATE 07/23/13	SCALE 1 : 1	SHEET NO. 1 of 1

TITLE	EC ENCODING SWITCH		
MODLE	EC编码开关系列		
DWG NO.	KSD-EC1102S	SIZE	A4
PART NO.		VER	R2