# DIMENSIONS

注: A—G 为品管重点管控尺寸。

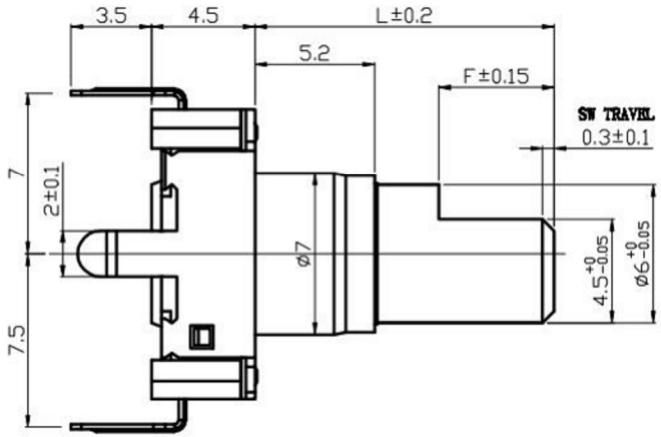


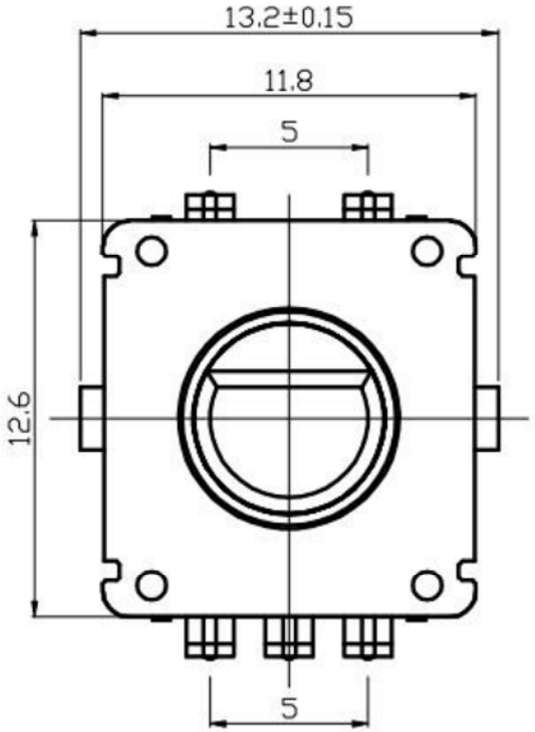


(SW01) ENCODER

(SW02) PUSH ON SW

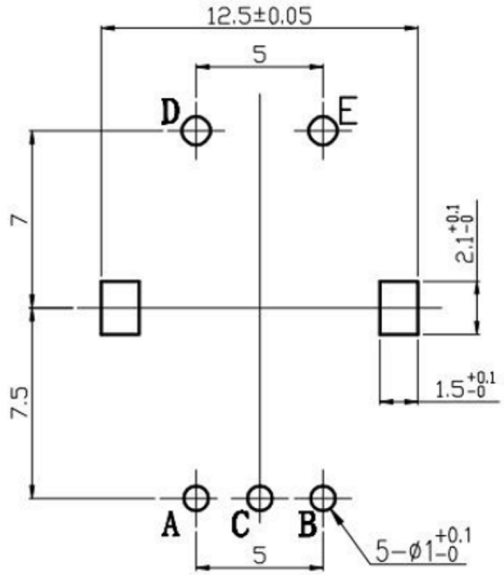


P.C.BOARD MOUNTING HOLE DIMENSIONS

## CLICK Position

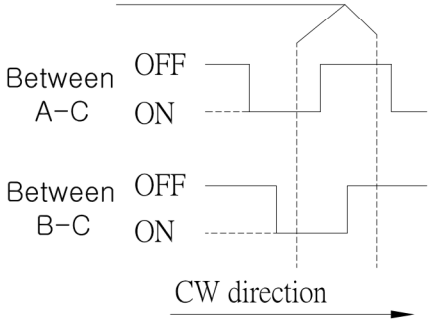


(SW01) OUTPUT

| Electrical characteristics 电气特性 | |
|---|---|
| Rating Power 额定功率 | DC5V 10mA |
| Fluttering 振荡 | T1,T3≤3ms |
| Sliding Nosie(Bounce)滑动杂音 | T2≤2ms |
| Dielectric Voltage 耐电压 | For 1 minute or more AC 300V |
| Insulation resistance 绝缘阻抗 | More than 100MΩ at DC 250V |
| Phase Difference 相位差 | △T≥0.08T |
| **Mechanical characteristics 机械特性** | |
| Total Rotational Angle 旋转角度 | 360° |
| Rotational Torque 旋转力矩 | 30gf.cm~200 gf.cm |
| Number of click 段位数量 | 30 Detents(Angle:12°±2°)<br>20 Detents(Angle:18°±2°) |
| Push-Pull Strength 轴推拉强度 | 10Kgf.cm Min for 10Sec |
| Bushing & nut tight strength 轴套锁紧强度 | 10.0Kgf Min |
| **Switch Specifcations 开关特性** | |
| Maximum Ratings 额定电压 | DC5V 10mA(1mA Min) |
| Contact resistance 接触阻抗 | 200mΩ Max |
| Travel of switch 开关移动量 | 0.5+0.4/-0.3 mm OR 1.5+0.4/-0.3 mm |
| Operating force of switch 开关动作力 | 500±200gf |
| **Environmental characteristics** | |
| Rotational Life 旋转寿命 | 30,000 cycles |
| Switch Life 开关寿命 | 20,000 cycles |

## (SW02)CIRCUIT DIAGRAM

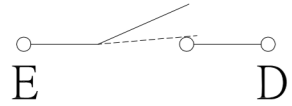


SW1

EC11 轴心轴套规格

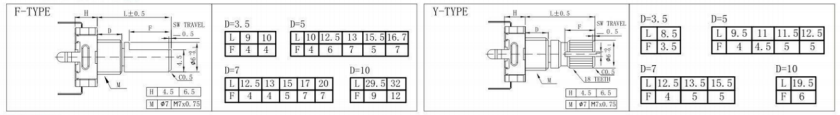


输出信号

| 轴的旋转方向 Shaft rotational direction | 信号 Signal | 正向 Direction | 反向 Reverse |
|---|---|---|---|
| 顺时针方向 C.W. | A(A~C端子间) A(Terminal A~C) | 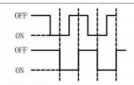 | 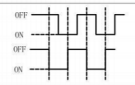 |
| 逆时针方向 C.C.W. | B(B~C端子间) B(Terminal B~C) | 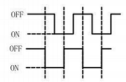 | 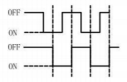 |

* 具体轴心规格，可依据客户需求订做。
Specific axis specifications can be customized according to customer needs.

| ITEM NO. | DESCRIPTION | DRAWN | DATE |
|---|---|---|---|
| 2 | 公差及料號更新 | Jack | 072313 |
| 1 | 圖面更新 | Frank Wu | 021012 |

广东科斯达电子科技有限公司
KSDKG Guang dong Keside Electronic Technology Co., Ltd.

TOLERANCE UNLESS OTHERWISE STATED: Up to 5 ±0.2; Above 5 ~ 15 ±0.3; Above 15 ~ 30 ±0.4; Above 30 ~ 50 ±0.5; Angle ±0.3°

3RD. ANGEL'S | UNITS | MM

| | | DATE |
|---|---|---|
| DRAWN BY: | Jack Lu | 07/23/13 |
| CHECKED BY: | Jacky Chen | 07/23/13 |
| APPROVED BY: | Tony Kao | 07/23/13 |

| | | | |
|---|---|---|---|
| MAT'L | | TITLE | EC ENCODING SWITCH |
| FINISH | | MODLE | EC编码开关系列 |
| SCALE | 1 : 1 | DWG NO. | KSD-EC1108S |
| SHEET NO. | 1 of 1 | PART NO. | |

SIZE A4 | VER R2