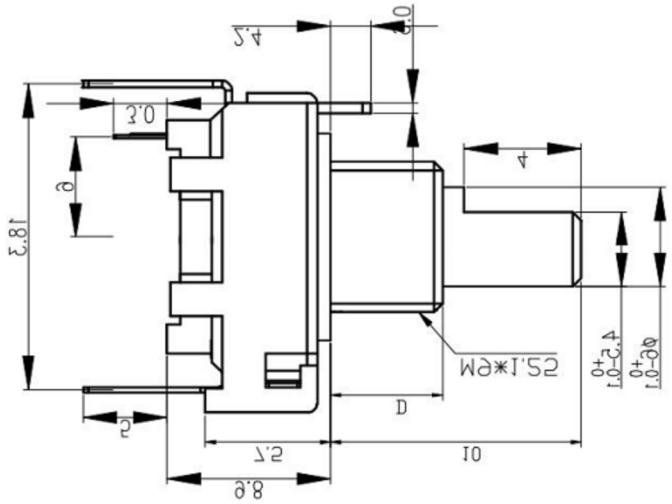

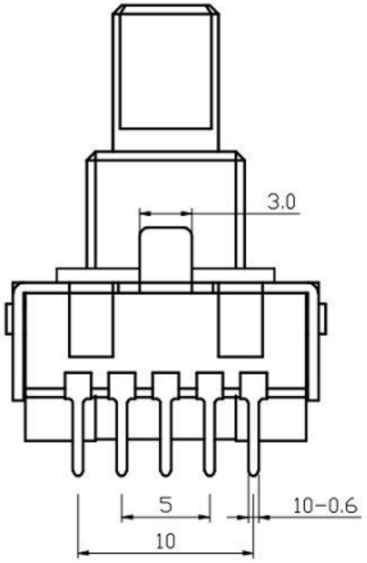

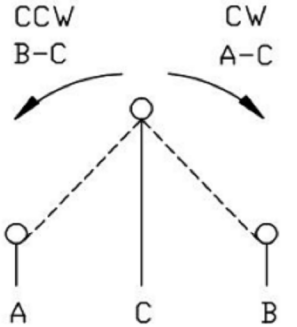

SW2 电路图
CIRCUIT DIAGRAM

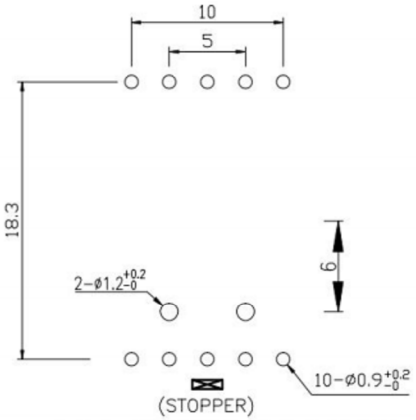

P.C.B MOUNTING HOLE DETAIL

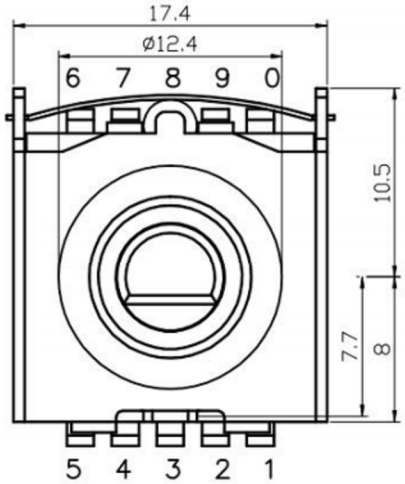

SHAFT SHOWN IN FULL
CCW POSITION

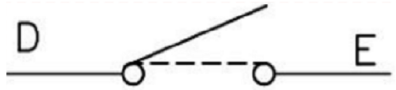

SW1 回路图
SWITCH CIRCUIT

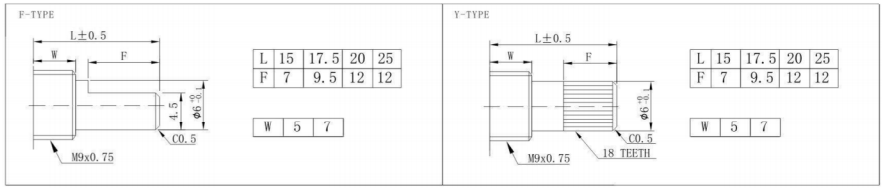

L	15	17.5	20	25
F	7	9.5	12	12

W	5	7

L	15	17.5	20	25
F	7	9.5	12	12

W	5	7

Electrical characteristics 电气特性

Rating Power 额定功率	DC5V 10mA
Contact Resistance 接触阻抗	Less than 1Ω
Dielectric Voltage 耐电压	For 1 minute or more AC 300V
Insulation Resistance 绝缘阻抗	More than 100MΩ at DC 250V

Mechanical characteristics 机械特性

Total Rotational Angle 旋转角度	90°±10°
Rotational Torque 旋转力矩	30gf.cm~300 gf.cm
Shaft Push & Pull Strength 轴推拉强度	8kgf.cm
Travel of switch 开关移动量	0.5±0.3 mm
Operating force of switch 开关动作力	500±200gf

Environmental characteristics

Rotational Life 旋转寿命	30,000 cycles
Switch Life 开关寿命	20,000 cycles

ITEM NO.	DESCRIPTION	DRAWN	DATE
2	公差及料號更新	Jack	072313
1	圖面更新	Frank Wu	021012

广东科斯达电子科技有限公司
KSDKG Guang dong Keside Electronic Technology Co., Ltd.

TOLERANCE UNLESS OTHERWISE STATED: Up to 5 ±0.2; Above 5 ~ 15 ±0.3; Above 15 ~ 30 ±0.4; Above 30 ~ 50 ±0.5; Angle ±0.3°

3RD. ANGEL'S | UNITS | MM

		DATE
DRAWN BY:	Jack Lu	07/23/13
CHECKED BY:	Jacky Chen	07/23/13
APPROVED BY:	Tony Kao	07/23/13

MAT'L		TITLE	KSD-RS ROTARY SWITCH
FINISH		MODLE	KSD-RS旋转开关系列
SCALE	1 : 1	DWG NO.	KSD-RS1701S
SHEET NO.	1 of 1	PART NO.	

SIZE A4 | VER R2