KSD

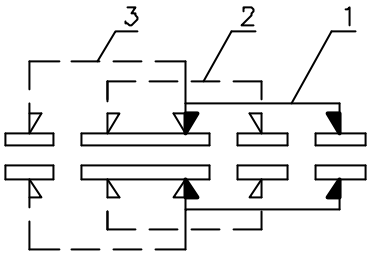

NON-SHORTING
SCHEMATIC

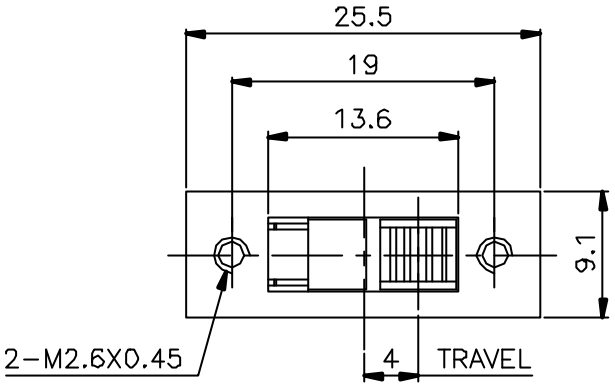

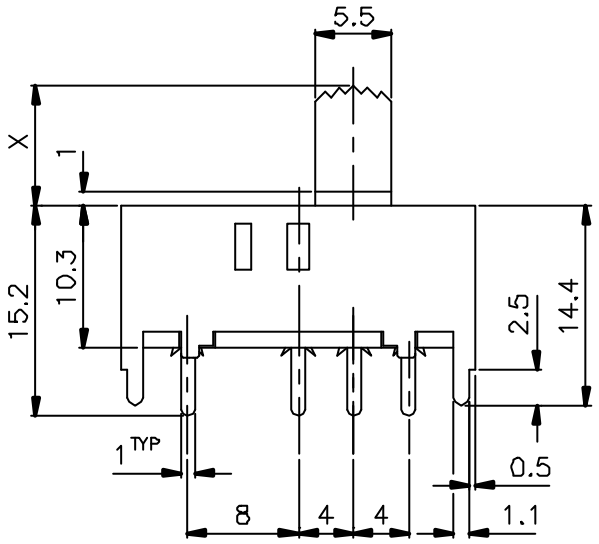

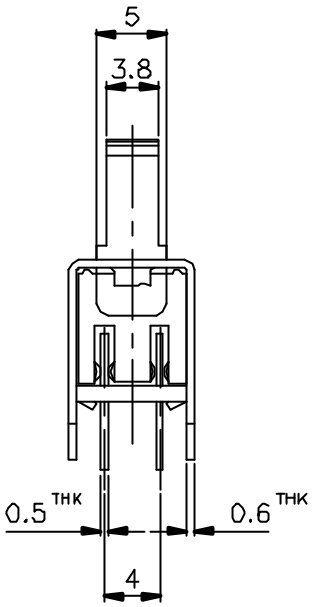

X=

ISSUED	SPECIFICATION (INITIAL)	TITLE: SLIDE SWITCH			
	RATING: DC 50V 0.5A	MODEL NO: SS-23H22-G			
	CONTACT RESISTANCE: Not more than 30mΩ(initial)				
	INSULATION RESISTANCE: 500MΩ AT 500V DC	UNIT: m m	DWN		
	WITHSTAND VOLTAGE: AC 500V FOR 1 MIN	SCALE: 2 : 1	CHK'D		
	OPERATION FORCE: 400 ± 300 g	TOLERANCE: ±0.2	APPD.		
	SWITCHING LIFE:10000 Cycles(6-10c/m loading)				
BY:	广东科斯达电子科技有限公司 GUANG DONG KE SI DA ELECTRONIC TECHNOLOGY CO., LTD.	DRWG NO: 860258-00			
DATE:					