KSD

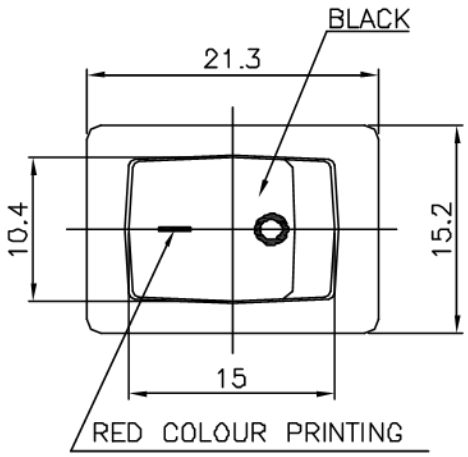

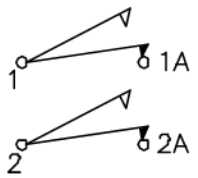

NON-SHORTING
SCHEMATIC

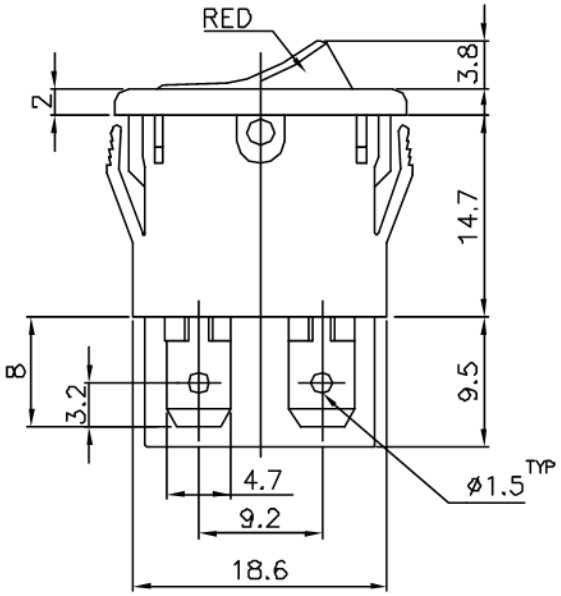

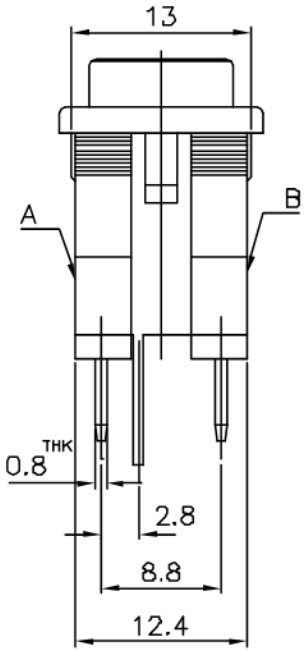

Rating :

SIDE A : LAMB RA
AC125V 16A (RES)
12A (IND)
T85
A2 A1

SIDE B :
6(4)A 5E4
10(6)A
250V~
B1 B2

Panel Cut-Out Dimensions

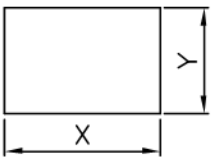

Panel thickness (mm/inch)	DIM X $^{+0.1}_{-0}$ (mm/inch)	DIM Y ±0.1 (mm/inch)
1.2~1.6 (.047~.063)	19.0 (0.748)	13.1 (.516)
1.6~2.0 (.063~.079)	19.4 (0.764)	
2.0~2.4 (.079~.095)	19.8 (0.779)	

ISSUED	SPECIFICATION (INITIAL)	TITLE: ROCKER SWITCH 2P2T			
	RATING: AC 125V 16A	MODEL NO: U16WR-22Q04-R1(1R)BR-00-#480			
	CONTACT RESISTANCE: Not more than 30mΩ	UNIT: mm	DWN	ZHT	28/07/06
	INSULATION RESISTANCE: 500MΩ at 500V DC	SCALE: 2 : 1	CHK'D		
	WITHSTAND VOLTAGE: AC 1000V for 1 min	TOLERANCE: ±0.2	APPD.		
	OPERATION FORCE: 1000±300g				
	SWITCHING LIFE: 10000 Cycles(6-10c/m loading)				
BY:	广东科斯达电子科技有限公司 GUANG DONG KE SI DA ELECTRONIC TECHNOLOGY CO., LTD.	DRWG NO: A30210-01			
DATE:					