Process Capable

RoHS Compliant 2002/95/EC

REV.	ECN. NO.	APPD.

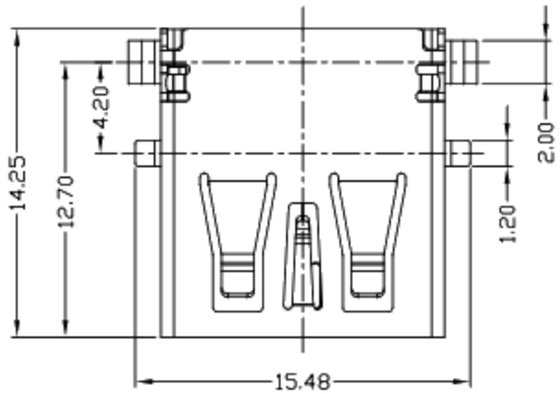

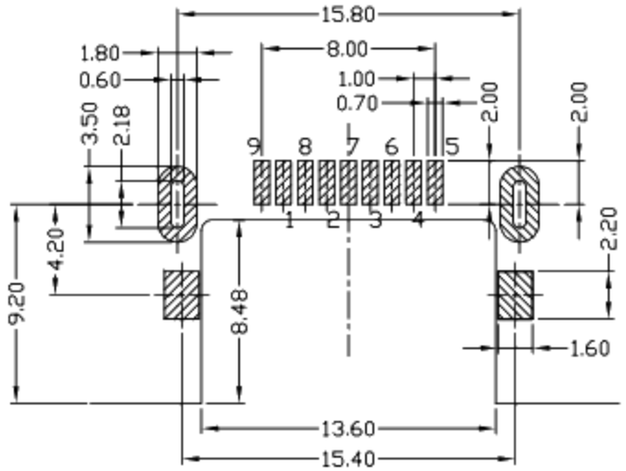

Pin #	SIGNAL NAME	DESCRIPTION	MATING SEQUENCE
1	VBUS	POWER	SECOND
2	D-	USB 2.0 DIFFERENTIAL PAIR	THIRD
3	D+		
4	GND	GROUND FOR POWER RETURN	SECOND
5	STDA_SSRX-	SUPERSPEED RECEIVER DIFFERENTIAL PAIR	LAST
6	STDA_SSRX+		
7	GND_DRAIN	GROUND FOR SIGNAL RETURN	
8	STDA_SSTX-	SUPERSPEED TRANSMITTER DIFFERENTIAL PAIR	
9	STDA_SSTX+		
Shell	Shield	CONNECTOR METAL SHELL	FRIST

RECOMMENDED PCB LAYOUT

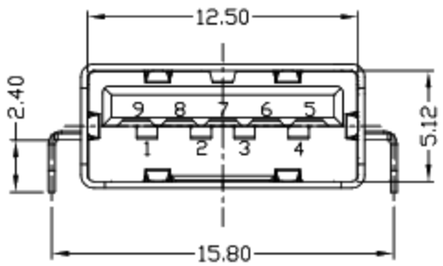

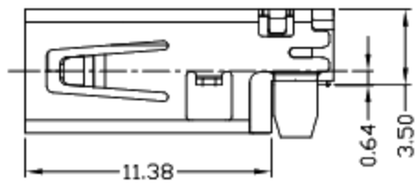

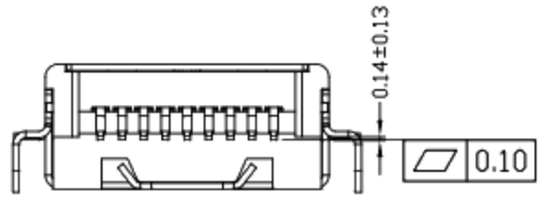

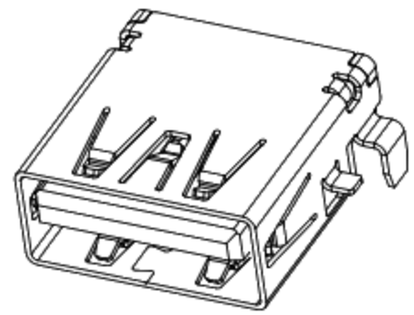

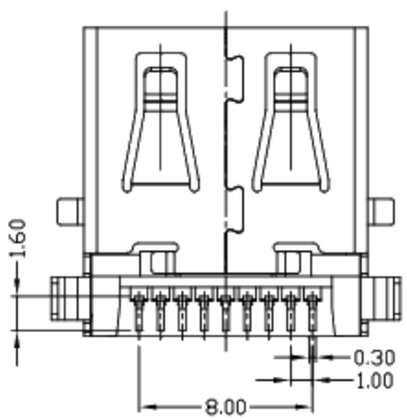

NOTES:

1. ELECTRICAL:
   1) CURRENT RATING:1.5AMP;
   2) INSULATION RESISTANCE: 100MΩ MIN;
   3) CONTACT RESISTANCE: 30mΩ MAX;
   4) WITHSTANDING VOLTAGE: 100V AC;
   5) OPERATING TEMPERATURE:-25°C ~ +85°C.
2. Mechanical:
   1) Mating Force: 35N MAX
   2) Unmating Force: 10N MIN.
3. DIMENSIONS MARKED "▼" TO BE CHECKED BY Q.C & IPQC.
4. PART NO.

W:WHITE
B:BLACK
BL:BLUE

1:Au 1U"
5:Au 15U"
6:Au 30U"

1:PBT
2:PA6T
3:PA9T
4:LCP

Bill of materials:

NO	PARTS	MATERIAL	QTY	FINISHING
3	SHELL	COPPER ALLOY	1	PLATED NICKEL
2	TERMINAL	COPPER ALLOY	9	PLATED GOLD/TIN
1	HOUSING	LCP+30%GF	1	UL94V-0

X. ±0.35	X.° ±2°
.X ±0.3	.X° ±1°
.XX ±0.25	.XX°
.XXX ±0.15	.XXX°

UNITS mm

MAT'L SEE NOTE

FINISH SEE NOTE

Q'TY

THESE DRAWINGS AND SPECIFICATIONS ARE THE PROPERTY OF ACCURATE INNOTECH INC. AND SHALL NOT BE REPRODUCED, COPIED OR USED IN ANY MANNER WITHOUT THE PRIOR WRITTEN CONSENT OF ACCURATE INNOTECH INC.

廣東科斯達電子科技有限公司

TITLE: USB 3.0 AF 沉板 SMT 无卷边方脚

DR: gan 2016/12/3

CHKD: gan 2016/12/3

APPD:

PART NO.:

DWG NO.:

SCALE	SHEET	REV.	
1:1	1/1	B	CUSTOMER DRAWING