**RoHS** Compliant

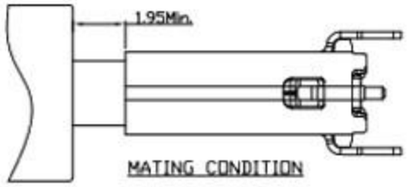


MATING CONDITION

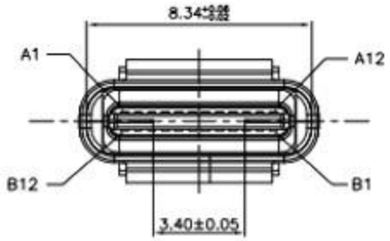


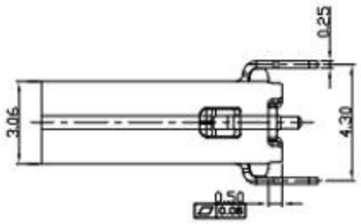

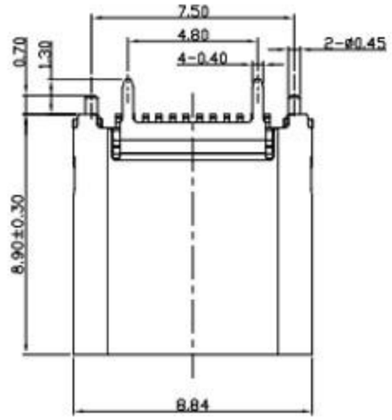


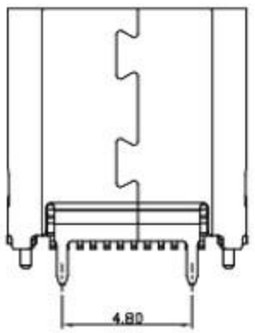


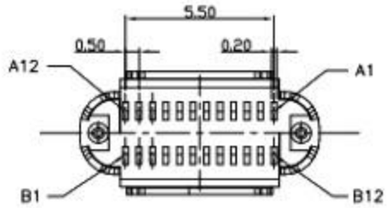


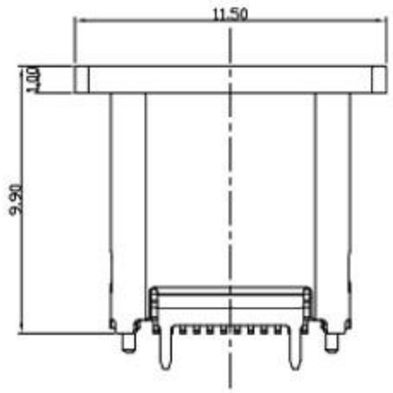


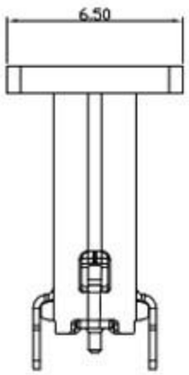


INCREASE THE DIAGRAMS OF CAP

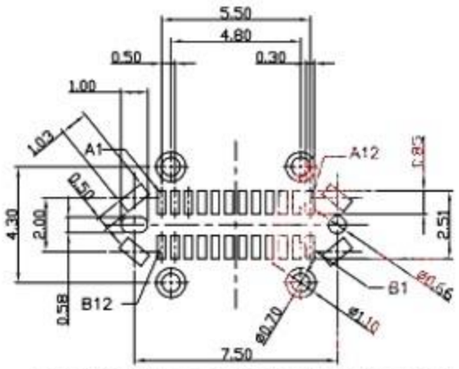


RECOMMEND P.C.B LAYOUT(COMPONENT SIDE)

TOLERANCE FOR PCB LAYOUT IS ± 0.05

KEEP OUT AREA

NOTES:

1.ELECTRICAL CHARACTERISTICS:
- 1)CURRENT RATING: 5A FOR VBUS PIN; 1.25A FOR VCONN PIN.
- 2)INSULATION RESISTANCE: 100MΩ Min
- 3)CONTACT RESISTANCE: 40mΩ Max FOR INITIAL.
  10mΩ CHANGE AFTER TEST. MEASURE AT 20mV, 100mA.
- 4)WITHSTANDING VOLTAGE: 100V AC R.M.S.
- 5)OPERATING TEMPERATURE: -40°C ~85°C

2.MECHANICAL CHARACTERISTICS:
- 1)MATING FORCE: 5N~20N
- 2)UNMATED FORCE: 6N~20N AFTER TEST
- 3)DURABILITY: 10,000 CYCLES

3.DIMENSIONS MARKED "▼"
TO BE CHECKED BY Q.C & IPQC.

4.PART NO.

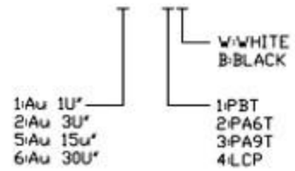


| Pin | Signal Name | Mating Sequence | Pin | Signal Name | Mating Sequence |
|---|---|---|---|---|---|
| A1 | GND | First | B12 | GND | First |
| A2 | SSTXp1 | Second | B11 | SSRXp1 | Second |
| A3 | SSTXn1 | Second | B10 | SSRXn1 | Second |
| A4 | VBUS | First | B9 | VBUS | First |
| A5 | CC1 | Second | B8 | SBU2 | Second |
| A6 | Dp1 | Second | B7 | Dn2 | Second |
| A7 | Dn1 | Second | B6 | Dp2 | Second |
| A8 | SBU1 | Second | B5 | CC2 | Second |
| A9 | VBUS | First | B4 | VBUS | First |
| A10 | SSRXn2 | Second | B3 | SSTXn2 | Second |
| A11 | SSRXp2 | Second | B2 | SSTXp2 | Second |
| A12 | GND | First | B1 | GND | First |
| SHELL | | GND | SHELL | | GND |

| NO. | PART NAME | QTY | MATERIAL | DESCRIPTION | REMARK |
|---|---|---|---|---|---|
| ⑤ | MID PLATE | 1 | STAINLESS STEEL | Au . PLATING. | T=0.15mm |
| ④ | SHELL | 1 | STAINLESS STEEL | Au . PLATING. | T=0.30mm |
| ③ | TERMINAL-B | 1 | TABLE 2: | TABLE 2: | T=0.12mm |
| ② | TERMINAL-A | 1 | | | T=0.12mm |
| ① | INSULATOR | 1 | HIGH TEMP | Black | |

| ECN NO. | REV. | DESCRIPTION | DATE | CHANGE |
|---|---|---|---|---|
| JH2016-080 | X2 | 随工程图上升版本次 | 2016.06.15 | 陈少兵 |
| JH2016-071 | X1 | 新增规格 | 2016.06.10 | 陈少兵 |
| 20151224001 | X | NEW DRAWING | 2016.05.05 | 陈少兵 |

| | | |
|---|---|---|
| DESIGN | 陈少兵 | 2016.06.15 |
| CHECK | 郑小伟 | 2016.06.15 |
| APPROVAL | 吕海涛 | 2016.06.15 |

UNLESS OTHERWISE, GENERAL TOLERANCE:
- X.xxx ±0.10
- X.xx ±0.20
- X.x ±0.30
- X. ±0.38

ANGULAR:
- X.xx ±1°
- X.x ±3°
- X. ±5°

廣東科斯達電子科技有限公司

TITLE: USB connector

P/N: Detail See PART NO. LIST

MODEL:

DRAW NO.:

THIRD ANGLE PROJECTION

| UNIT: | SCALE: | SIZE: | SHEET: |
|---|---|---|---|
| mm | 1:1 | A4 | 1/1 |