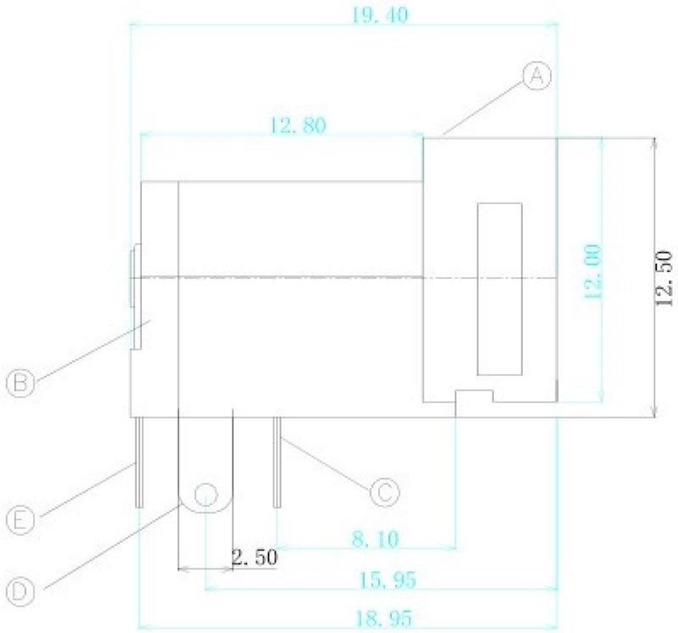

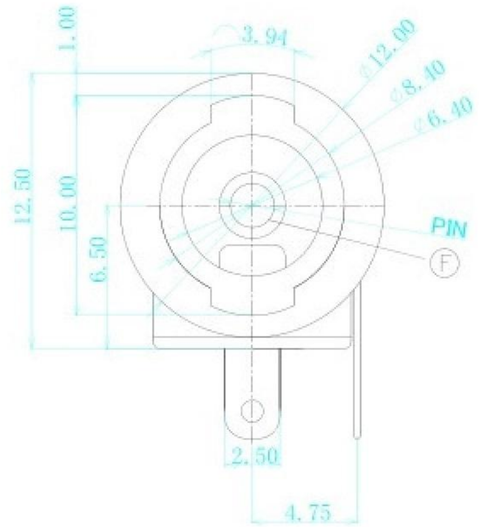

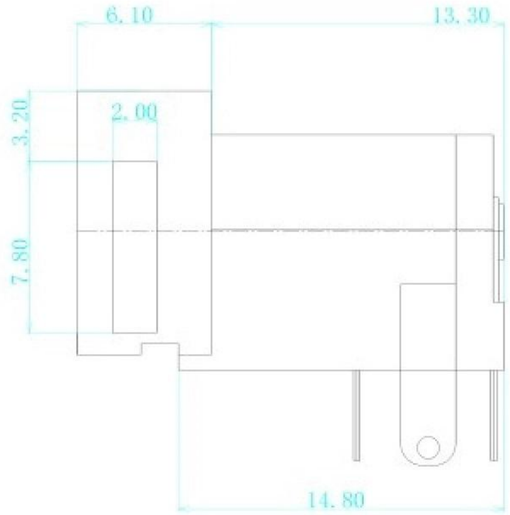

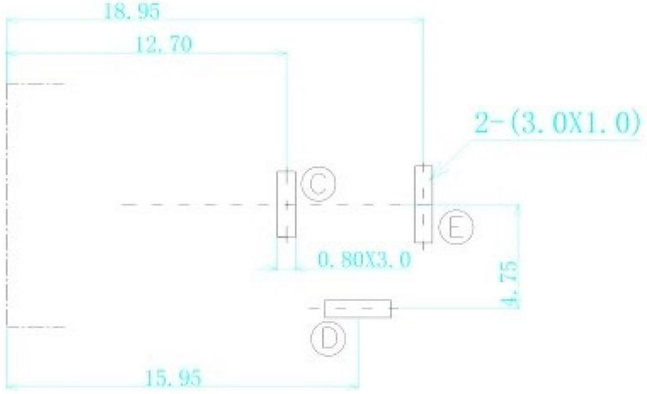

PCB LAYOUT TOP VIEW

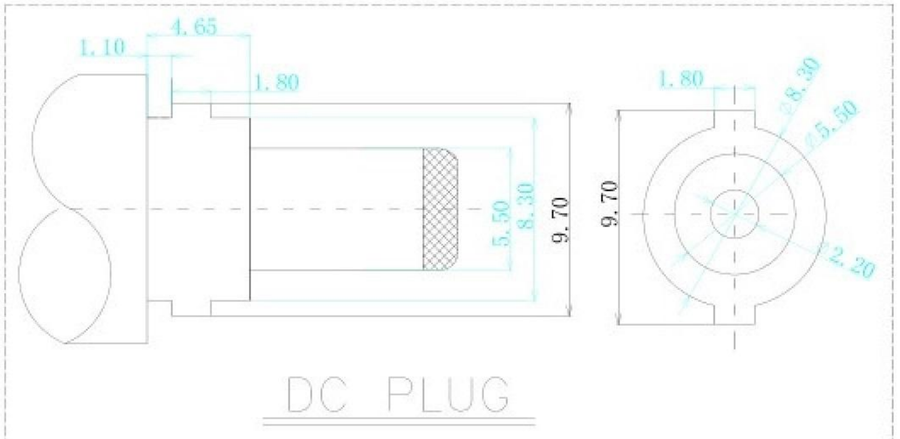

DC PLUG

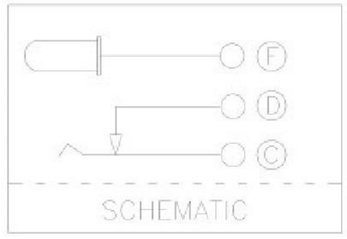

SCHEMATIC

MARK	DESCRIPTION	DATE	REVISED	APPROVED
△X				
△X				
△X				

REVISIONS

UNSPECIFIED TOLERANCES	
ANGLAR	±5°
X.X	±0.2mm
X.XX	±0.1mm
X.XXX	±0.05mm

DSND		DATE		SCALE: N/A
DWN		DATE		VIEW:
CHKD		DATE		UNIT: mm
APPD		DATE		SIZE: A4

MODEL TYPE: DC POWER JACK

PART NO.:

DWG NO.:

廣東科斯達電子科技有限公司

WEIGHT	SHEET	REVISION
1.0g	1/1	A0