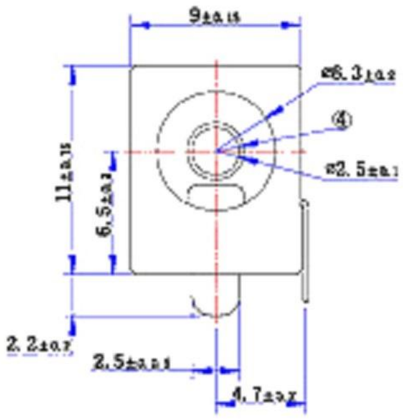


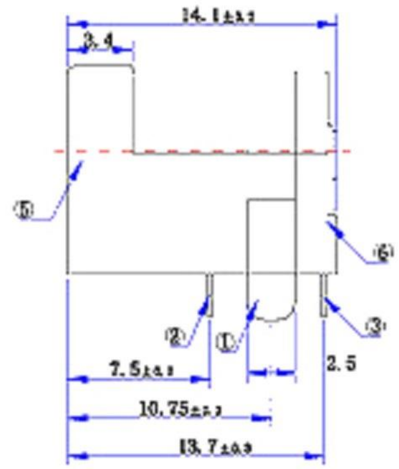


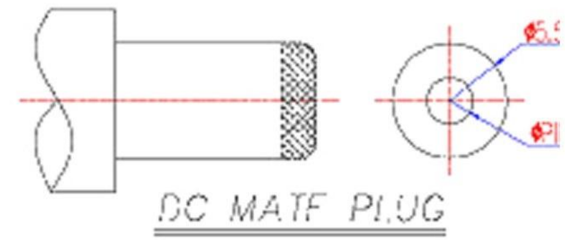


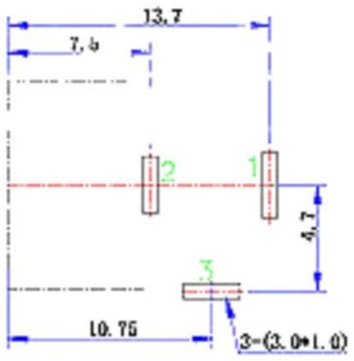


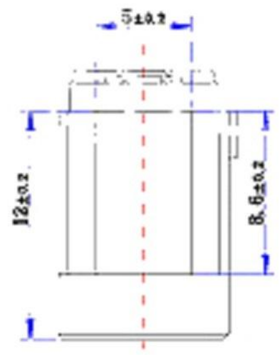


| PIN | ϕ1.65 | ϕ2.0 | ϕ2.35 | ϕ2.5 |
|---|---|---|---|---|
| APPD | | | | |

| | MATERIAL | PLATING |
|---|---|---|
| center pin | Brass | tin |
| terminal 1 | Brass | tin |
| terminal 2 | Sus | tin |
| terminal 3 | Brass | tin |
| plastic | Pbt | |

| MARK | DESCRIPTION | DATE | REVISED | APPROVED |
|---|---|---|---|---|
| | | | | |
| △X | | | | |
| △X | | | | |
| △X | | | | |

REVISIONS

| UNSPECIFIED TOLERANCES | |
|---|---|
| ANGLAR | ±5° |
| X.X | ±0.2mm |
| X.XX | ±0.1mm |
| X.XXX | ±0.05mm |

| | | | | | |
|---|---|---|---|---|---|
| DSND | | DATE | | SCALE: N/A | MODEL TYPE: DC POWER JACK |
| DWN | | DATE | | VIEW: | PART NO.: |
| CHKD | | DATE | | UNIT: mm | DWG NO.: |
| APPD | | DATE | | SIZE: A4 | |

廣東科斯達電子科技有限公司

| WEIGHT | SHEET | REVISION |
|---|---|---|
| 1.0g | 1/1 | A0 |