SCHEMATIC	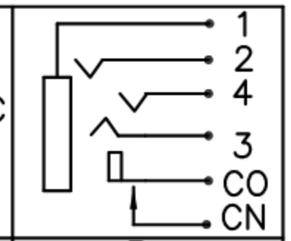
MODEL NO	D

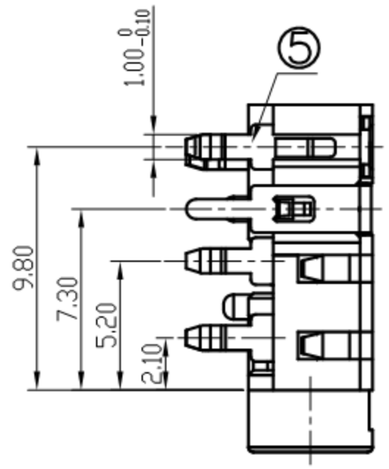

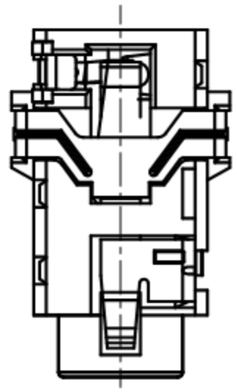

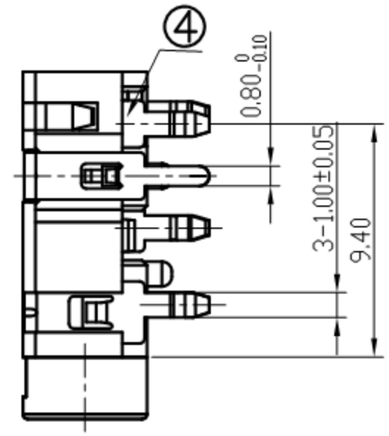

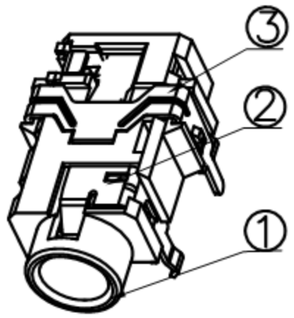

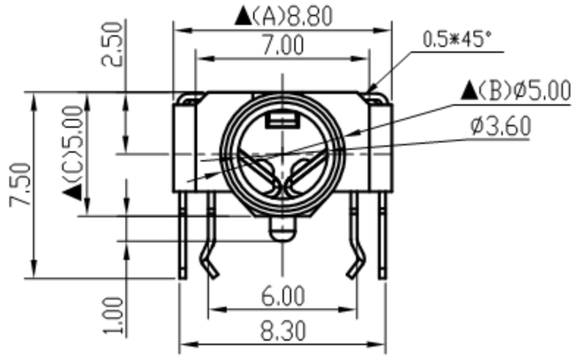

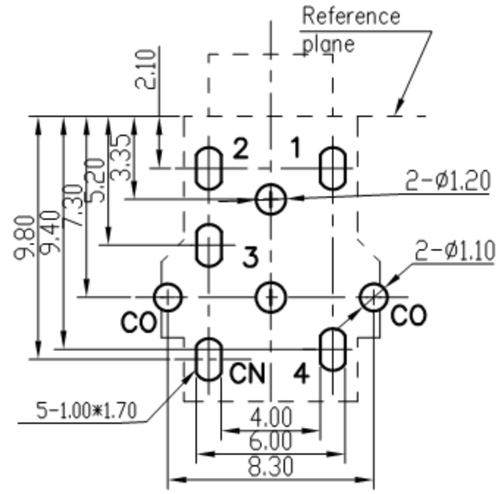

Pin Hole Layout
(Jack Bottom View)

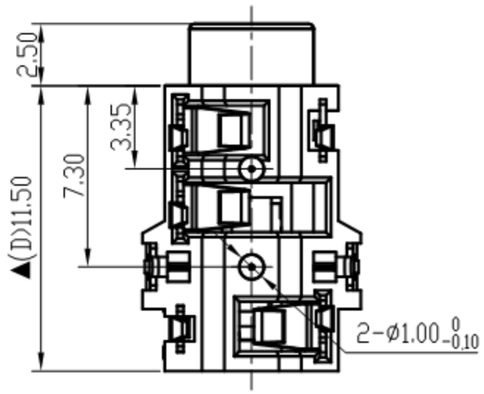

NO.	Description	Material	Q'TY	Finish
5.	Make Contct	0.25T Brass	1	Silver Plated
4.	Contact	0.25T Phosphor Bronze	3	Silver Plated
3.	Transfer Contct	0.25T Phosphor Bronze	1	Silver Plated
2.	Earth Contct	0.25T Phosphor Bronze	1	Silver Plated
1.	Housing	PA66	1	Black Color

广东科斯达电子科技有限公司
GUANG DONG KE SI DA ELECTRONIC TECHNOLOGY CO., LTD.

DATE	DWN	CHKD	APVD	MANAGER
09.01.2020	王平華			

PART NAME :3.5ø PHONE JACK | PART NUMBER:SCJ306P00DS0B00G | VERSION:5.0

TOLERANCE :±0.3mm UNLESS OTHERWISE SPECIFIED | UNIT:mm | SCALE:1/1

SPECIFICATIONS:
Contact Resistance : 30mΩ max
Insulation Resistance : 100MΩ min. at DC 500V
Dielectric Withstanding Voltage: AC 500V for one minute
Remark: ▲: The Most Important Dimension

For Redference
僅供參攷

RoHS&SVHC
Pb Free Process