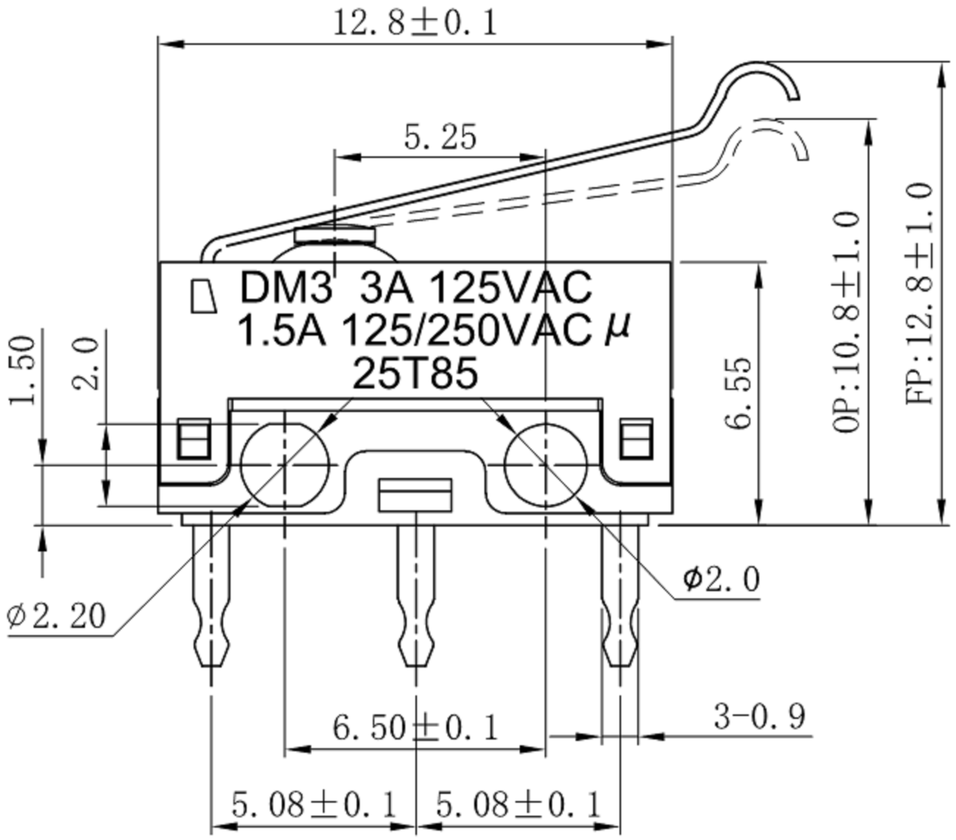

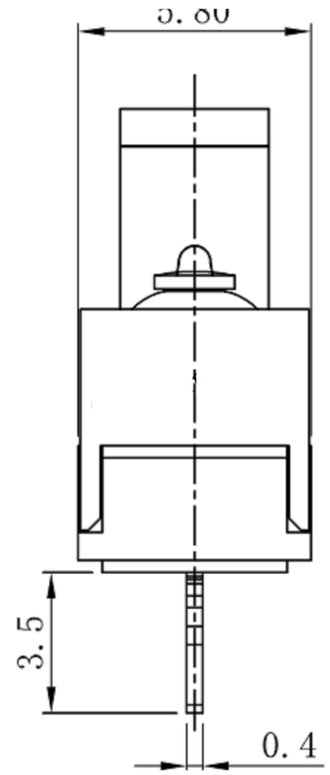

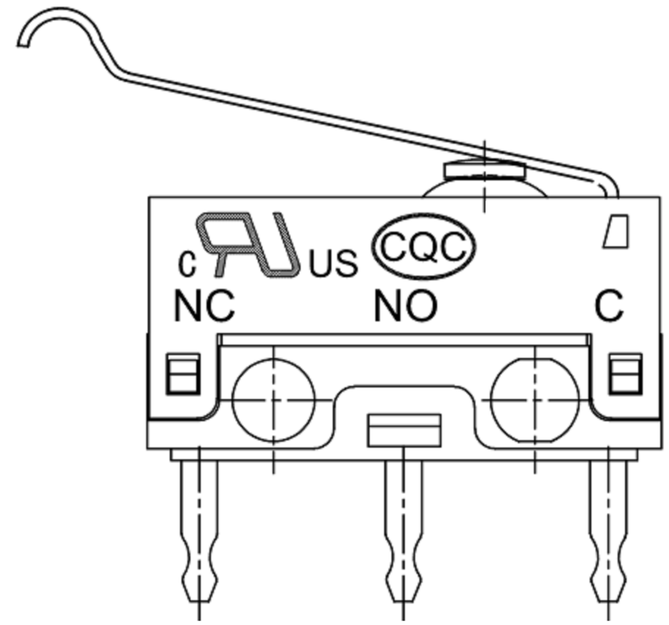

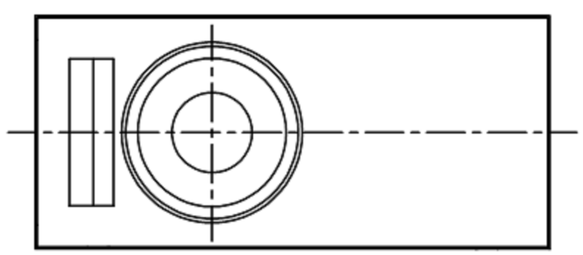

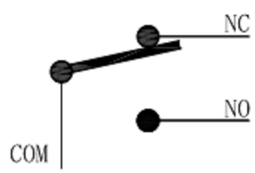

电路图

序号	零件名称	数量	材质	备注
10	防水帽	1	硅胶	
9	防水垫	1	硅胶	
8	触点	3	银合金	
7	弹片	1	磷铜	
6	NO端子	1	黄铜镀银	
5	NC端子	1	黄铜镀银	
4	COM端子	1	黄铜镀银	
3	按钮	1	PBT 阻燃料	
2	盖片	1	PBT 阻燃料	
1	底座	1	PBT 阻燃料	

Rating	3A 125VAC 1.5A 125/250VAC	Electrical Life	10,000 cycles
Contact Resistance	500mΩ Max	Mechanical Life	1000,000 cycles
Insulation Resistance	>100MΩ DC500V	Ambient Temper. Used	-25° C to +85° C
Withstand Voltage	AC500V 1min.	Ambient Humidity Used	≤85%RH
Soldering Temper.	250±5° C 5s	Operating Force	110±30gf

ITEM NO.	DESCRIPTION	DRAWN	DATE
1	更新Electrical Life	Jack	121015

广东科斯达电子科技有限公司
GUANG DONG KE SI DA ELECTRONIC TECHNOLOGY CO., LTD.

TOLERANCE UNLESS OTHERWISE STATED : Up to 5 ±0.2; Above 5 ~ 15 ±0.3; Above 15 ~ 30 ±0.4; Above 30 ~ 50 ±0.5; Angle ±0.3°

3RD. ANGEL'S | UNITS | MM

DRAWN BY: Jack Lu	DATE 12/10/15	MAT'L	
CHECKED BY: Jacky Chen	DATE 12/10/15	FINISH	
APPROVED BY: Tony Kao	DATE 12/10/15	SCALE	1 : 1
		SHEET NO.	1 of 1

TITLE	SWITCH		
MODLE	MICRO SWITCH		
DWG NO.		SIZE	A4
PART NO.		VER	R1