REV.	DESCRIPTION	APPROVED BY	DATE	ECN NO.
A	RELEASE	Fido Weng	22/12/08'	ECN10134
B	端子改杯口	Fido Weng	20/05/13'	ECN13009
C	修改外觀總長	Fido Weng	21/06/13'	

CUSTOMER DRAWING

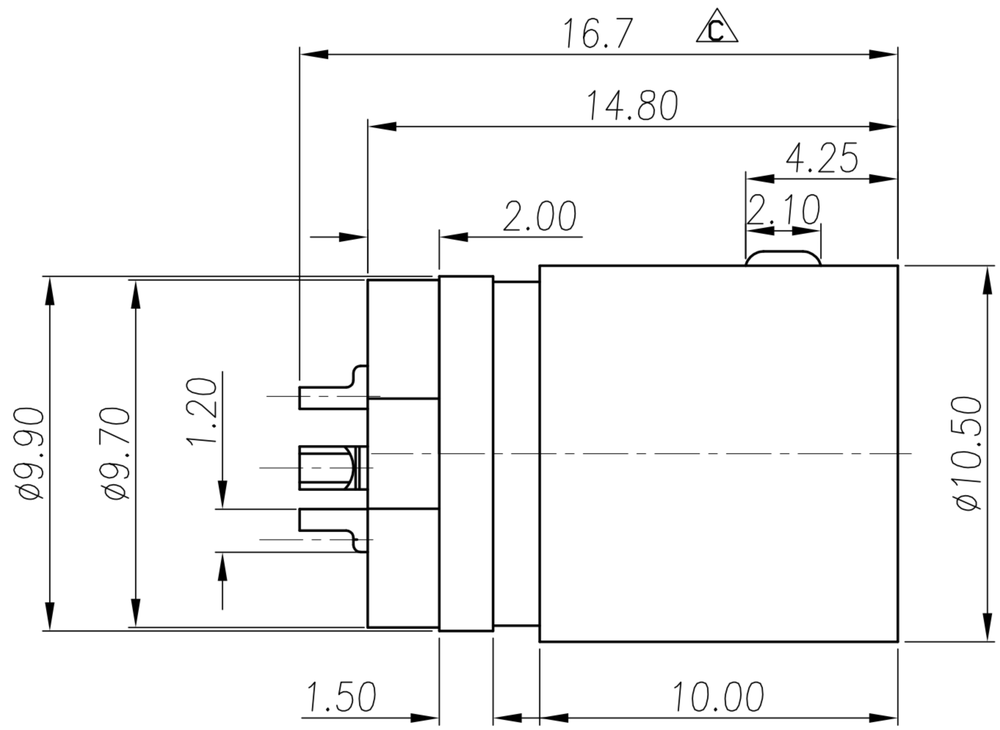

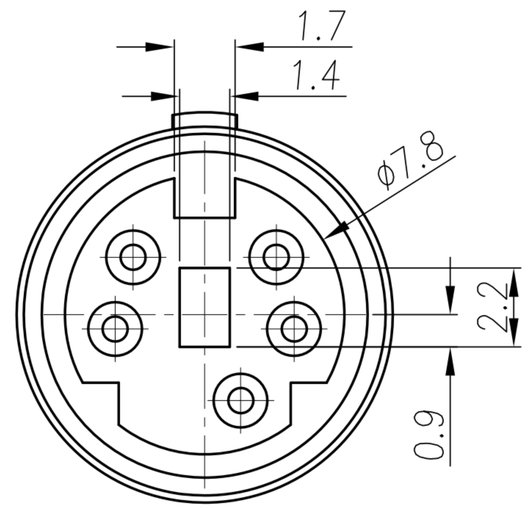

1. MATERIAL :
   1-1. HOUSING : PBT UL94V-0 ; COLOR : BLACK
   1-2. CONTACT : PHOSPHOR BRONZE
   1-3. SHELL : BRASS
2. FINISH :
   2-1. CONTACT : SEE TABLE A
   UNDER PLATE : NICKEL
   2-2. SHELL : NICKEL PLATED OVER ALL

TABLE A

	MD-05F1-02	GOLD FLASH
	MD-05F1-01	SILVER
	P/N	CONTACT PLATING

DRAWN	Jen Xie	APP'D	Fido Weng	UNIT	mm	TOLERANCE .x ±0.20 .xx ±0.10 .xxx ±0.05 .xxxx ±0.03 ANGULA ±1°	广东科斯达电子科技有限公司 GUANG DONG KE SI DA ELECTRONIC TECHNOLOGY CO., LTD.	TITLE	MD 5S(凸) 0.7厚 無彈片 系列		SHEET 1/1
CHK'D	Emily Suen			SCALE	1:1			PART NO.	SEE TABLE A	DWG NO. QC0152	VERSION C