REV.	DESCRIPTION	APPROVED BY	DATE	ECN NO.
A	Release	Fido Weng	16/08/10'	
B	MODIFY CONTACT TYPE	Fido Weng	10/12/10'	ECN10142
C	修改外觀總長	Fido Weng	21/06/13'	

CUSTOMER DRAWING

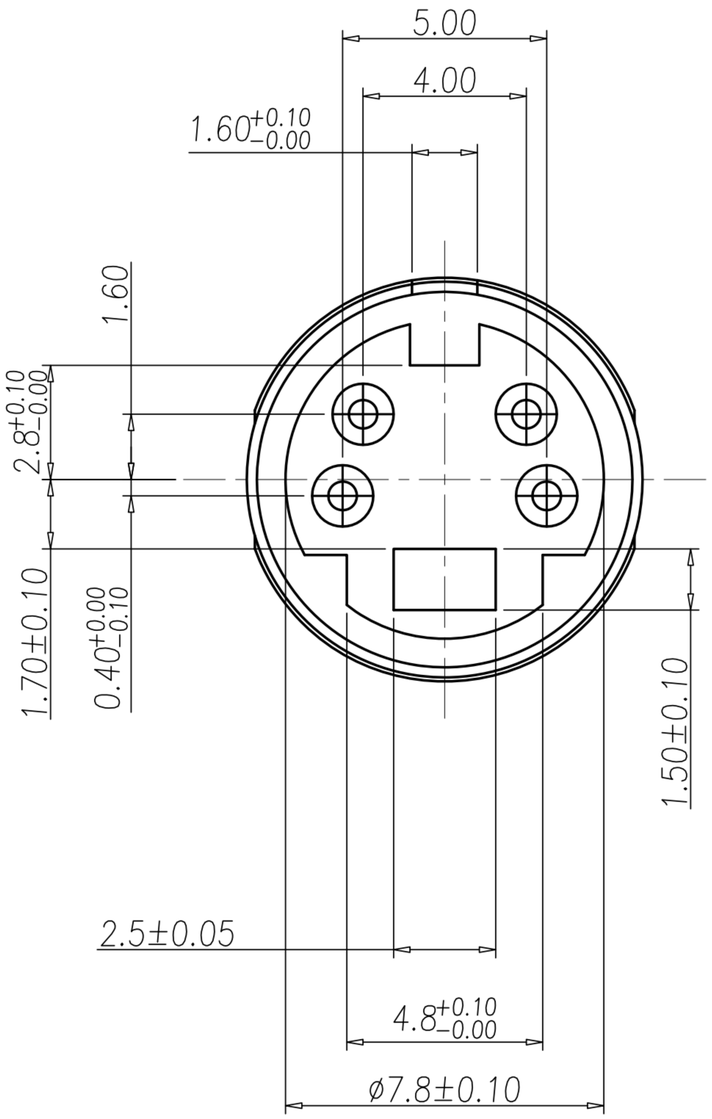

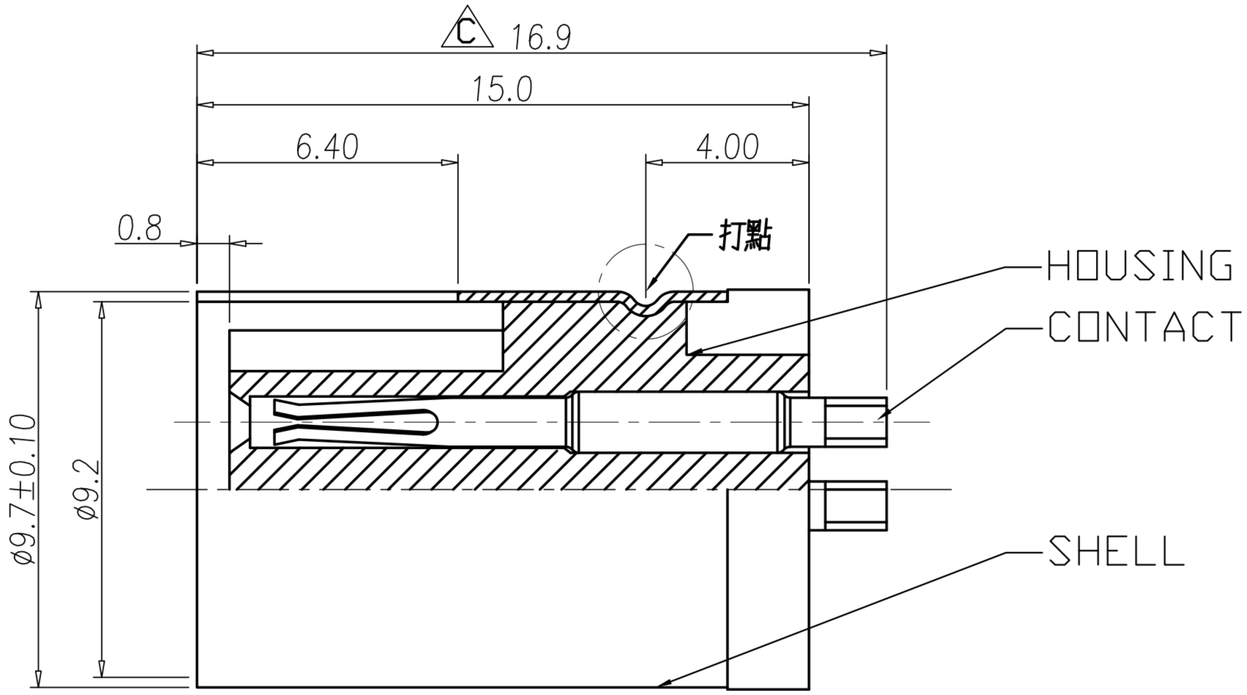

NOTE

1. MATERIAL :
   - 1−1. HOUSING : PBT UL94V−0 ; COLOR : BLACK
   - 1−2. CONTACT : PHOSPHOR BRONZE
   - 1−3. SHELL : BRASS
2. FINISH :
   - 2−1. CONTACT : GOLD FLASH PLATED
   - 2−2. SHELL : NICKEL PLATED.
3. ELECTRICAL SPECIFICATION :
   - 3−1. Rated current : 2A
   - 3−2. Rated voltage : 12V
4. Environmental :
   - 4−1. Operation Temperature : −20℃~85℃

DRAWN	Ku Chou	APP'D	Fido Weng	UNIT	mm	TOLERANCE .x ±0.20 .xx ±0.10 .xxx ±0.05 .xxxx ±0.03 ANGULA ±1°		广东科斯达电子科技有限公司 GUANG DONG KE SI DA ELECTRONIC TECHNOLOGY CO., LTD.	TITLE	MiniDin 4(F)無彈片		SHEET 1/1
CHK'D	Emily Suen			SCALE	1:1				PART NO.	MD-04F1-17	DWG NO. QC4936	VERSION C