| REV. | DESCRIPTION | APPVL. BY | DATE | ECN NO. |
|---|---|---|---|---|
| A | RELEASE | Fido Weng | 22/12/08' | |
| B | | | | |
| C | | | | |

# CUSTOMER DRAWING

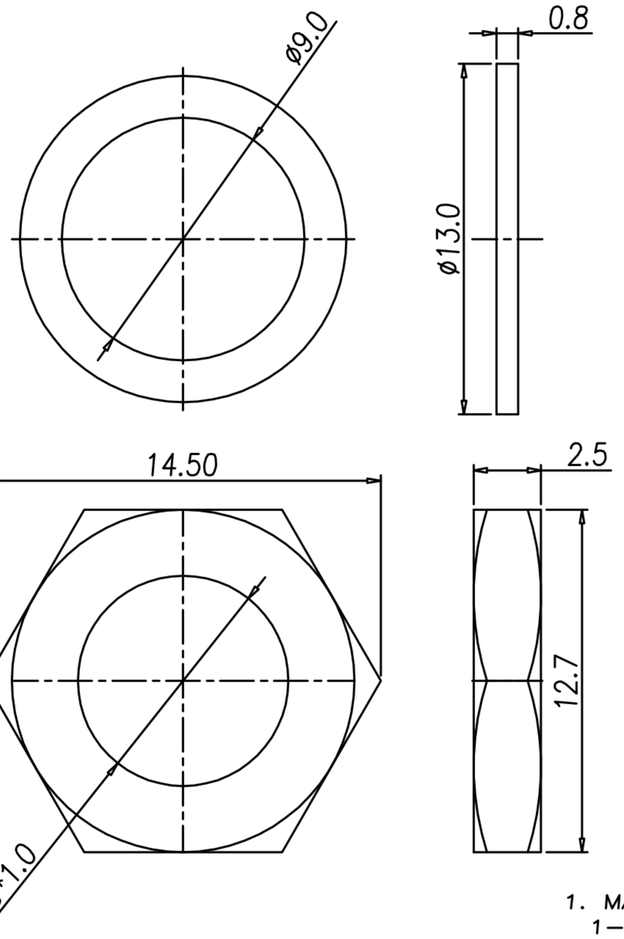


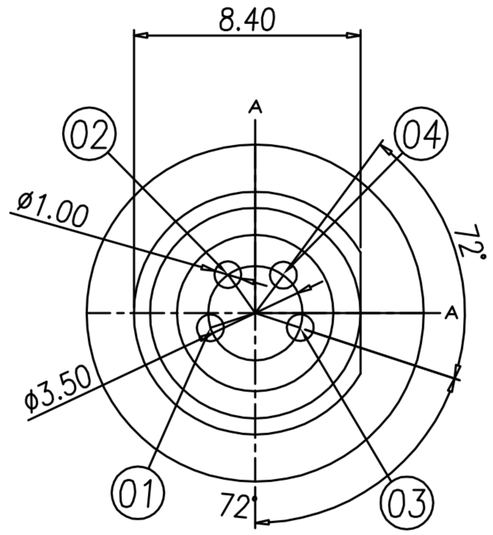


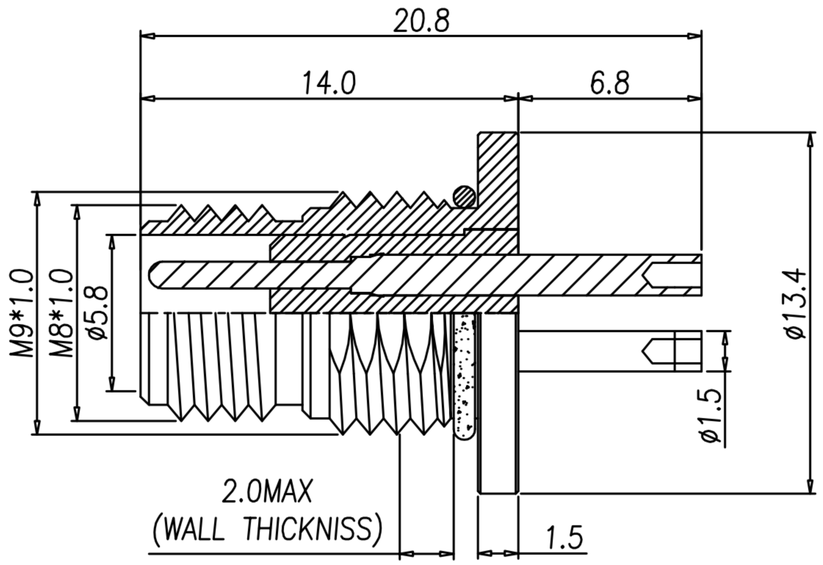


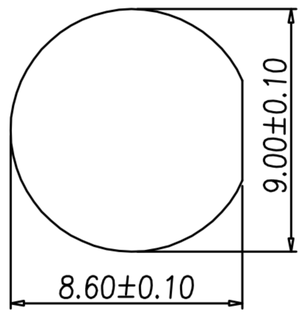


PANEL CUT-OUT

1. MATERIAL :
   1-1. HOUSING : PBT UL94V-0 ; COLOR : BLACK
   1-2. CONTACT : BRASS
   1-3. SHELL : BRASS
   1-4. WASHER : BRASS
   1-5. NUT : BRASS
   1-6. O-RING : EPDM ; COLOR : BLACK
2. FINISH :
   2-1. CONTACT : SEE TABLE A
   2-2. SHELL : SEE TABLE A
   2-3. WASHER : NICKET PLATING
   2-4. NUT : SEE TABLE A
3. ELETRICAL SPECICATION :
   3-1. Rated current : 4A
   3-2. Rated voltage : 60V
   3-3. Water proof : IPX7
4. Environmental :
   4-1. Operation Temperature : -40℃~85℃

TABLE A/表A

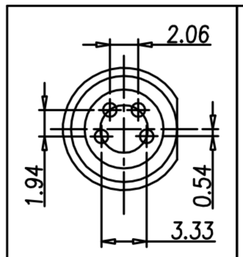


WP-04M2-120-11
WP-04M2-16
WP-04M2-42

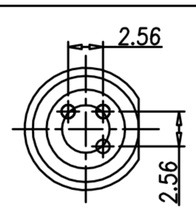


WP-03M2-63-11
WP-03M2-08

WP-02M2-07

| P/N | SHELL & NUT FINISH | CONTACT FINISH |
|---|---|---|
| WP-02M2-07 | NICKEL / 鎳 60u"~100u" | GOLD 10u" |
| WP-03M2-63-11 | NICKEL / 鎳 60u"~100u" | GOLD FLASH |
| WP-03M2-08 | NICKEL / 鎳 60u"~100u" | GOLD 10u" |
| WP-04M2-120-11 | NICKEL / 鎳 60u"~100u" | GOLD FLASH |
| WP-04M2-16 | NICKEL / 鎳 60u"~100u" | GOLD 10u" |
| WP-04M2-42 | BLACK NICKEL / 黑鎳 60u''~100u" | GOLD 10u" |

| | | | | | | | | | | | |
|---|---|---|---|---|---|---|---|---|---|---|---|
| DRAW | HULK | APPVL | Ku Chou | UNIT | mm | TOLERANCE .x ±0.20 .xx ±0.10 .xxx ±0.05 .xxxx ±0.03 ANGULA ±1° | 广东科斯达电子科技有限公司 GUANG DONG KE SI DA ELECTRONIC TECHNOLOGY CO., LTD. | TITLE | M8 (M)前鎖M9*1.0焊線式(洗單邊) | | SHEET 1/1 |
| CHECK | Emily Suen | | | SCALE | 1:1 | | | PART NO. | SEE TABLE A | DWG NO. QC3499 | VERSION A |