REV.	DESCRIPTION	APPROVED BY	DATE	ECN NO.
A	RELEASE	Emily Suen	05/08/11'	
B	CHANGE MATERIAL	Emily Suen	16/09/22'	
C				
D				

CUSTOMER DRAWING

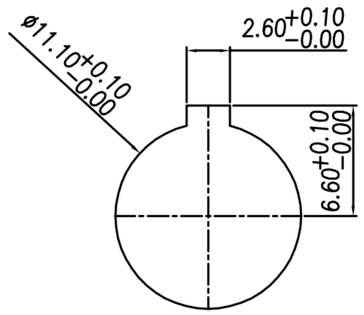

RECOMMENDED MOUNTING HOLE

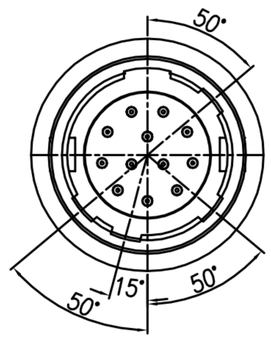

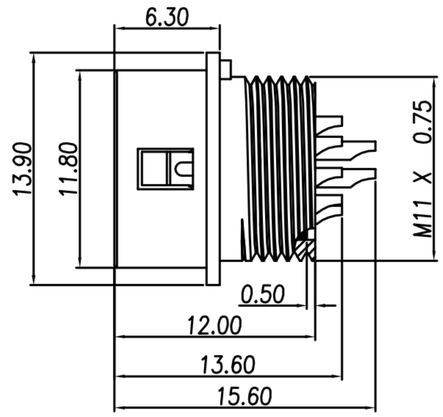

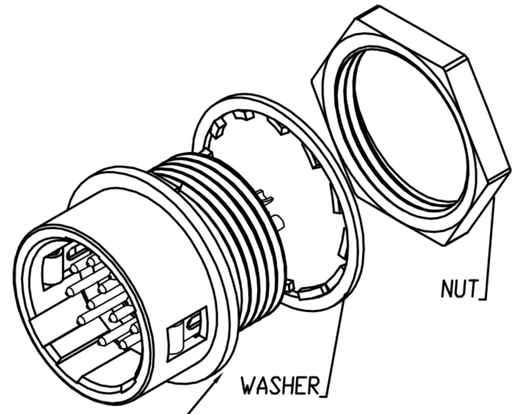

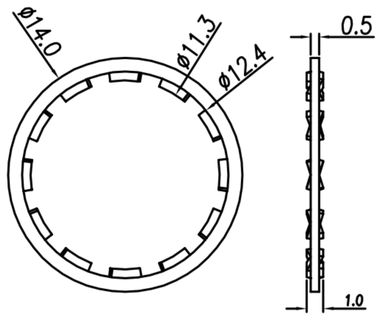

WASHER

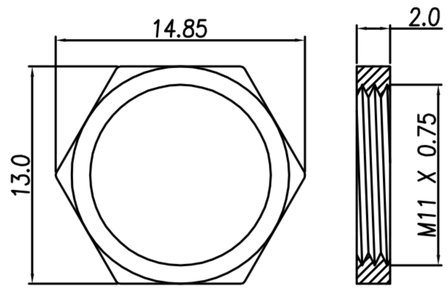

NUT

1. MATERIAL :
   - B 1-1. HOUSING : NYLON66 UL94V-0; COLOR : BLACK
   - 1-2. CONTACT : BRASS
   - 1-3. SHELL : ZINC ALLOY
   - 1-4. SPRING : STAINLESS STEEL
   - 1-5. WASHER : PHOSPHOR BRONZE
   - 1-6. NUT : BRASS
2. FINISH :
   - 2-1. CONTACT : GOLD FLASH
   - 2-2. SHELL : NICKEL
   - 2-3. WASHER : NICKEL
   - 2-4. NUT : NICKEL
3. ELECTRICAL SPECIFICATION :
   - 3-1. Rated current : 2A
   - 3-2. Rated voltage : 100V AC / 140V DC
4. Environmental :
   - 4-1. Operation Temperature : -25℃~85℃

TABLE A

CONTACT ARRANGEMENT & DIMENSIONS(FRONT VIEW)

DI-12M2-03	DI-10M2-03
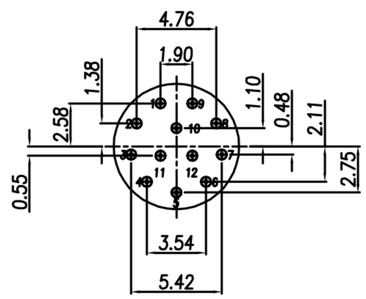	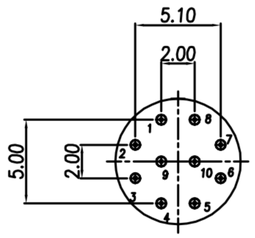

DRAWN	Mark Kao	APPVL	Ku Chou	UNIT	mm	TOLERANCE .x ±0.20 .xx ±0.10 .xxx ±0.05 .xxxx ±0.03 ANGULA ±1°	广东科斯达电子科技有限公司 GUANG DONG KE SI DA ELECTRONIC TECHNOLOGY CO., LTD.	TITLE	DIN (M)焊线式(SHELL TYPE:RECEPTACLE)		SHEET 1/1
CHK'D	Emily Suen			SCALE	1:1			PART NO.	SEE TABLE A	DWG NO. QC5556	VERSION B