REV.	DESCRIPTION	APPVL. BY	DATE	ECN NO.
A	RELEASE	Fido Weng	22/12/08'	
B				
C				

CUSTOMER DRAWING

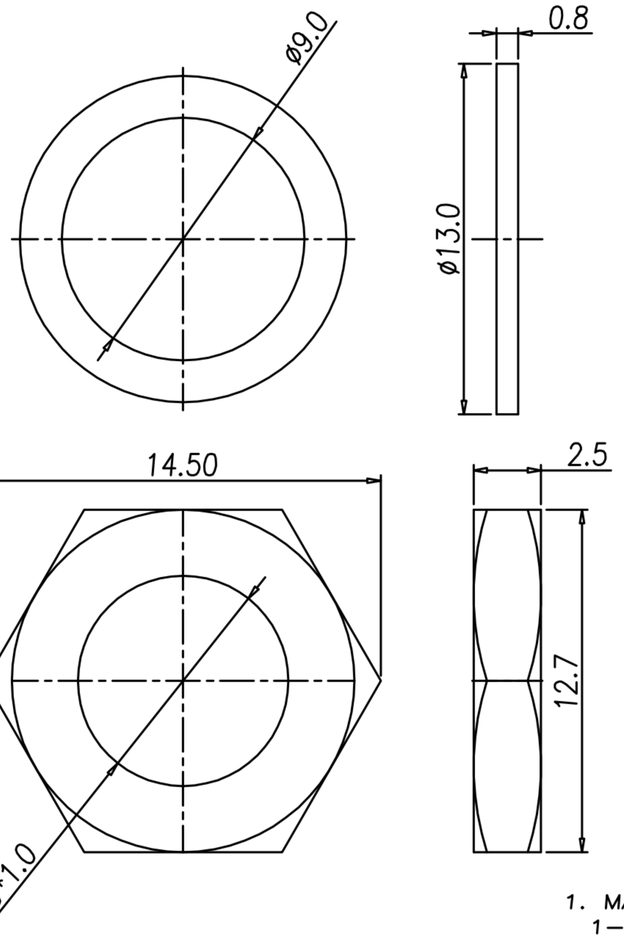

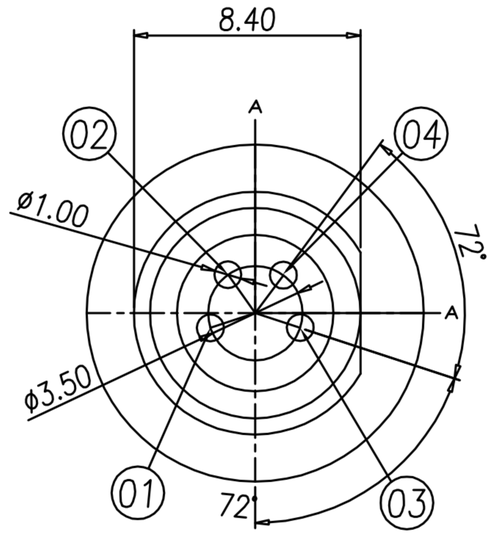

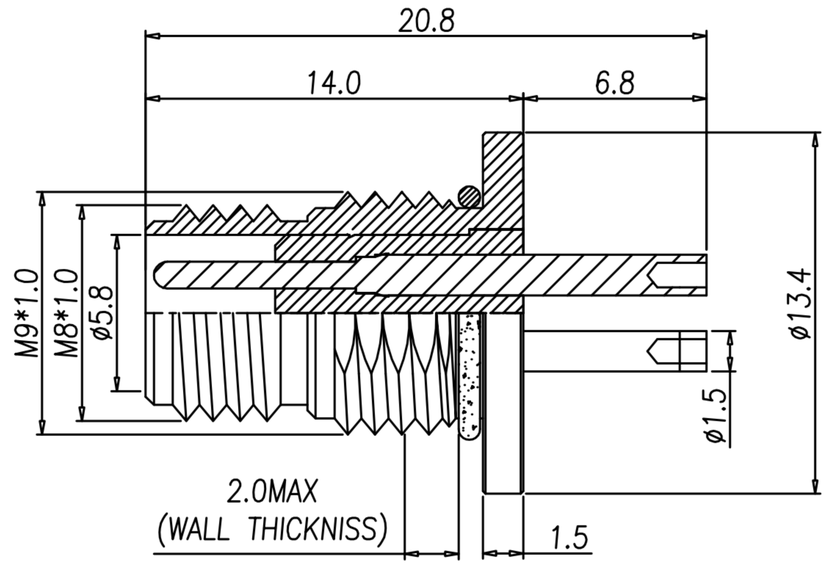

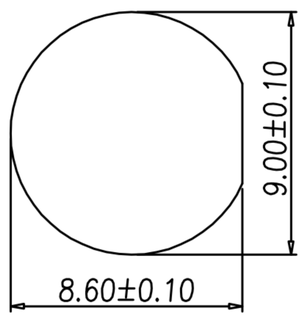

PANEL CUT-OUT

1. MATERIAL :
   1-1. HOUSING : PBT UL94V-0 ; COLOR : BLACK
   1-2. CONTACT : BRASS
   1-3. SHELL : BRASS
   1-4. WASHER : BRASS
   1-5. NUT : BRASS
   1-6. O-RING : EPDM ; COLOR : BLACK
2. FINISH :
   2-1. CONTACT : SEE TABLE A
   2-2. SHELL : SEE TABLE A
   2-3. WASHER : NICKET PLATING
   2-4. NUT : SEE TABLE A
3. ELETRICAL SPECICATION :
   3-1. Rated current : 4A
   3-2. Rated voltage : 60V
   3-3. Water proof : IPX7
4. Environmental :
   4-1. Operation Temperature : -40℃~85℃

TABLE A/表A

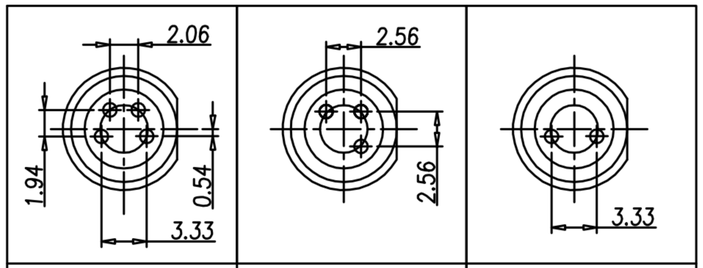

WP-04M2-120-11 WP-04M2-16 WP-04M2-42	WP-03M2-63-11 WP-03M2-08	WP-02M2-07

P/N	SHELL & NUT FINISH	CONTACT FINISH
WP-02M2-07	NICKEL / 鎳 60u"~100u"	GOLD 10u"
WP-03M2-63-11	NICKEL / 鎳 60u"~100u"	GOLD FLASH
WP-03M2-08	NICKEL / 鎳 60u"~100u"	GOLD 10u"
WP-04M2-120-11	NICKEL / 鎳 60u"~100u"	GOLD FLASH
WP-04M2-16	NICKEL / 鎳 60u"~100u"	GOLD 10u"
WP-04M2-42	BLACK NICKEL / 黑鎳 60u''~100u"	GOLD 10u"

DRAW	HULK	APPVL	Ku Chou	UNIT	mm	TOLERANCE .x ±0.20 .xx ±0.10 .xxx ±0.05 .xxxx ±0.03 ANGULA ±1°	广东科斯达电子科技有限公司 GUANG DONG KE SI DA ELECTRONIC TECHNOLOGY CO., LTD.	TITLE	M8 (M)前鎖M9*1.0焊線式(洗單邊)		SHEET 1/1
CHECK	Emily Suen			SCALE	1:1			PART NO.	SEE TABLE A	DWG NO. QC3499	VERSION A