REV.	DESCRIPTION	APPROVED BY	DATE	ECN NO.
A	RELEASE	Fido Weng	03/11/17'	
B				
C				

CUSTOMER DRAWING

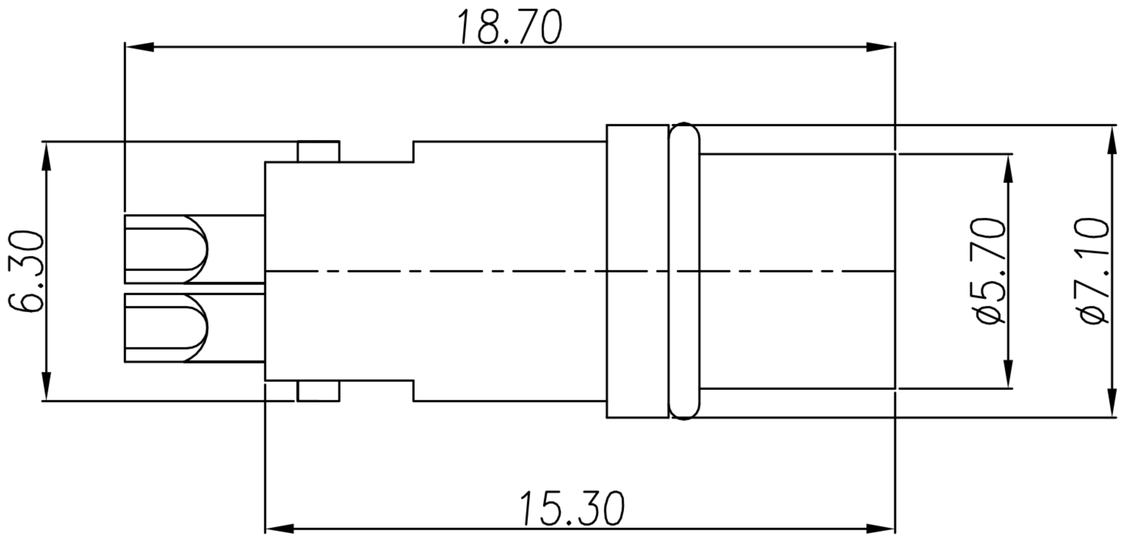

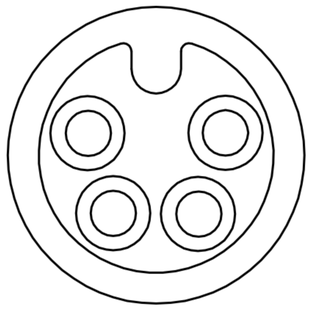

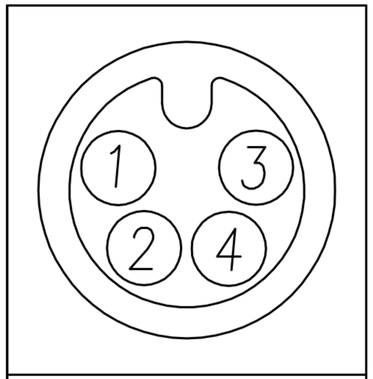

Pin Assignments
Front View

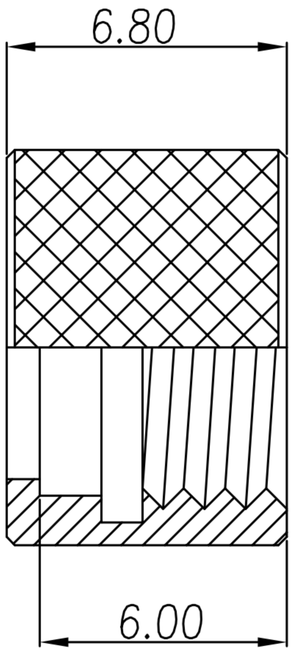

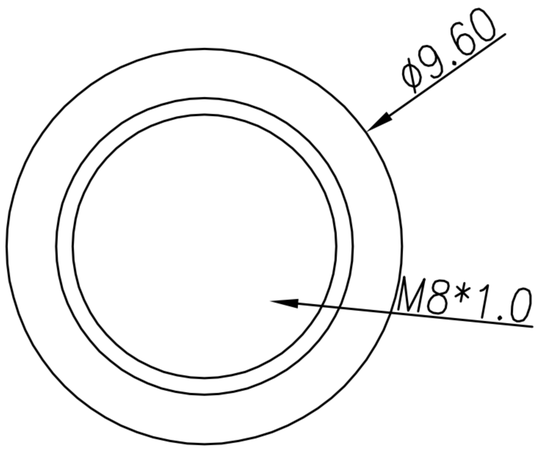

NUT

1. MATERIAL :
   1-1. HOUSING : PBT ; COLOR : BLACK
   1-2. CONTACT : BRONZE
   1-3. NUT : BRASS
2. FINISH :
   2-1. CONTACT : 10 MICRO INCHES MIN. GOLD PLATING
   2-2. NUT : NICKEL PLATED
3. ELECTRICAL SPECIFICATION :
   3-1. Rated current : 4A
   3-2. Rated Voltage : 60V
   3-3. Water proof : IP67/68
4. Environmental :
   4-1. Operation Temperature : -40℃~105℃

DRAWN	Ku Chou	APP'D	Emily Suen	UNIT	mm	TOLERANCE .x ±0.20 .xx ±0.10 .xxx ±0.05 .xxxx ±0.01 ANGULA ±1°	广东科斯达电子科技有限公司 GUANG DONG KE SI DA ELECTRONIC TECHNOLOGY CO., LTD.	TITLE	M8 4PIN (F) 焊線成型式(加防呆)			SHEET 1/1
CHK'D	Ku Chou			SCALE	1:1			PART NO.	WP-04F2-178-11	DWG NO.	QC8016	VERSION A