REV.	DESCRIPTION	APPROVED BY	DATE	ECN NO.
A	RELEASE	Emily Suen	22/11/11'	
B	CHANGE MATERIAL	Emily Suen	19/09/22'	
C				
D				

CUSTOMER DRAWING

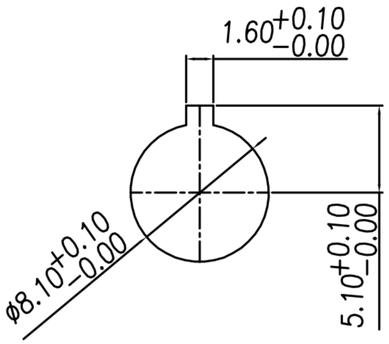

RECOMMENDED MOUNTING HOLE
(Panel thickness 0.7~2)

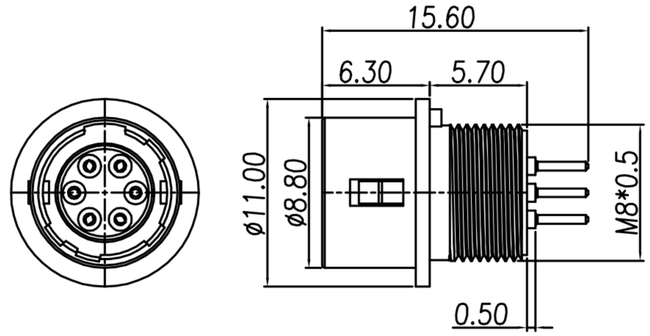

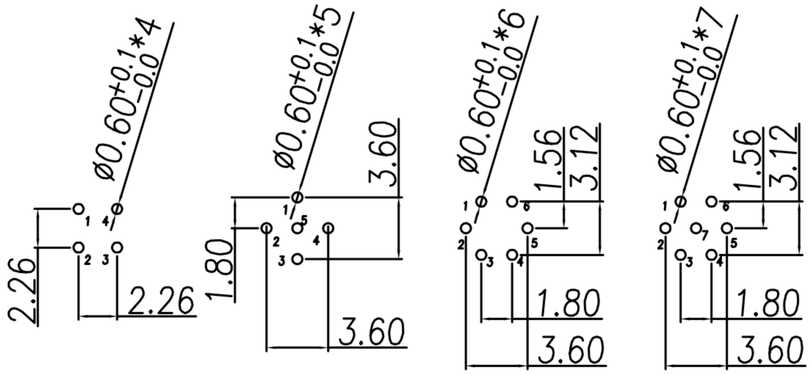

RECOMMEND P.C.B LAYOUT

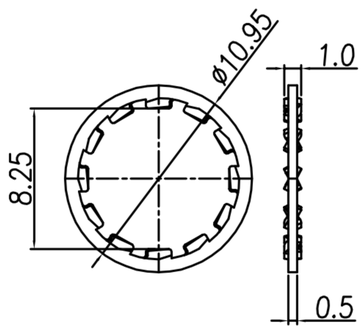

WASHER

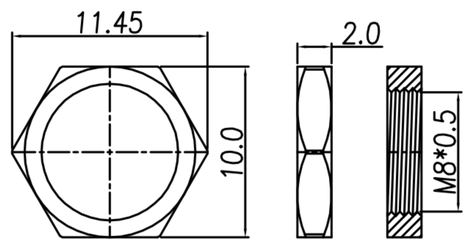

NUT

TABLE A

CONTACT ARRANGEMENT(FRONT VIEW)			
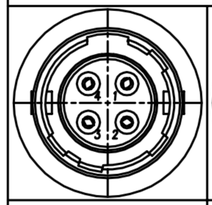	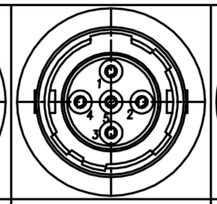	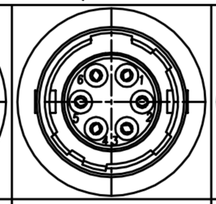	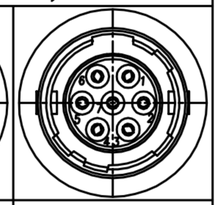
DI-04F3-02	DI-05F3-01	DI-06F3-02	DI-07F3-01

1. MATERIAL :
   - B 1-1. HOUSING : NYLON66 UL94V-0; COLOR : BLACK
   - 1-2. CONTACT : BRASS
   - 1-3. SHELL : ZINC ALLOY
   - 1-4. SPRING : STAINLESS STEEL
   - 1-5. WASHER : PHOSPHOR BRONZE
   - 1-6. NUT : BRASS
2. FINISH :
   - 2-1. CONTACT : GOLD FLASH
   - 2-2. SHELL : NICKEL
   - 2-3. WASHER : NICKEL
   - 2-4. NUT : NICKEL
3. ELECTRICAL SPECIFICATION :
   - 3-1. Rated current : 2A
   - 3-2. Rated voltage : 4PIN 150V AC / 200V DC ;
     5~7PIN 100V AC / 140V DC
4. Environmental :
   - 4-1. Operation Temperature : −25℃~85℃

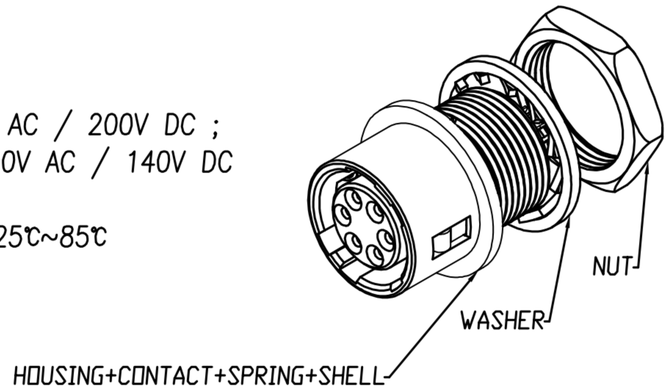

DRAWN	Ku Chou	APPVL	Emily Suen	UNIT	mm	TOLERANCE .x ±0.20 .xx ±0.10 .xxx ±0.05 .xxxx ±0.03 ANGULA ±1°	广东科斯达电子科技有限公司 GUANG DONG KE SI DA ELECTRONIC TECHNOLOGY CO., LTD.	TITLE	DIN (F) RECEPTACLE 鉚板/插件式(SHELL SIZE 7mm)		SHEET 1/1
CHK'D	Emily Suen			SCALE	1:1			PART NO.	SEE TABLE A	DWG NO. QC5669	VERSION B