CUSTOMER DRAWING

REV.	DESCRIPTION	APPVL. BY	DATE	ECN NO.
A	RELEASE	Fido	18/12/17'	
B				
C				

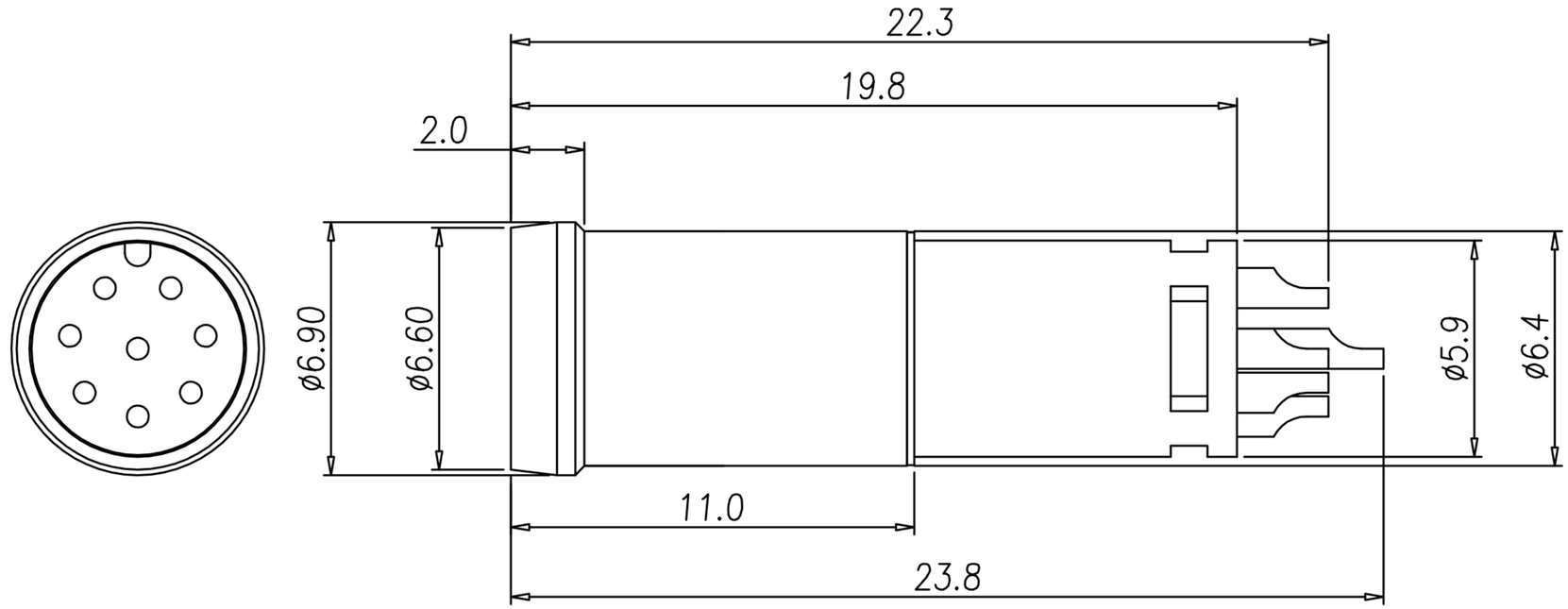

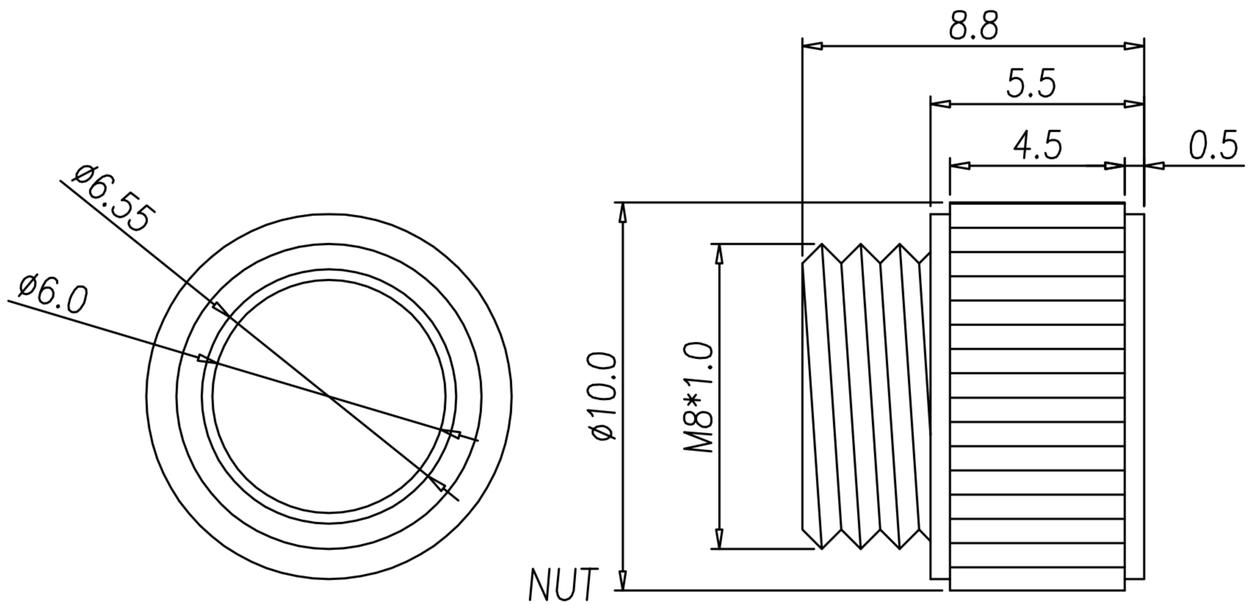

NOTE

1. MATERIAL :
   - 1-1. HOUSING : PA66 UL94V-0 ; COLOR : BLACK
   - 1-2. CONTACT : BRASS.
   - 1-3. NUT : BRASS.
   - 1-4. SHELL : BRASS.
2. FINISH :
   - 2-1. CONTACT : GOLD 10 MICRO INCHES MIN.
   - 2-2. SHELL : NICKEL PLATED.
   - 2-3. NUT : NICKEL PLATED.
3. ELECTRICAL SPECIFICATION :
   - 3-1. Rated current : 1.5A
   - 3-2. Rated Voltage : 30V
   - 3-3. Water proof : IP67
4. Environmental :
   - 4-1. Operation Temperature : -40℃~105℃

DRAW	Ku Chou	APPVL	Emily Suen	UNIT	mm	TOLERANCE .x ±0.20 .xx ±0.10 .xxx ±0.05 .xxxx ±0.03 ANGULA ±1°		广东科斯达电子科技有限公司 GUANG DONG KE SI DA ELECTRONIC TECHNOLOGY CO., LTD.	TITLE	M8 8PIN(M) 線端焊線式(接地)		SHEET 1/1
CHECK	Emily Suen			SCALE	1:1				PART NO.	WP-08M2-82-11	DWG NO. QC8892	VERSION A