CUSTOMER DRAWING

REV.	DESCRIPTION	APPROVED BY	DATE	ECN NO.
A	RELEASE	Fido Weng	24/06/21'	
B	更新編號	KU	15/11/18'	
C	ADD PART NO	KU	16/05/19'	

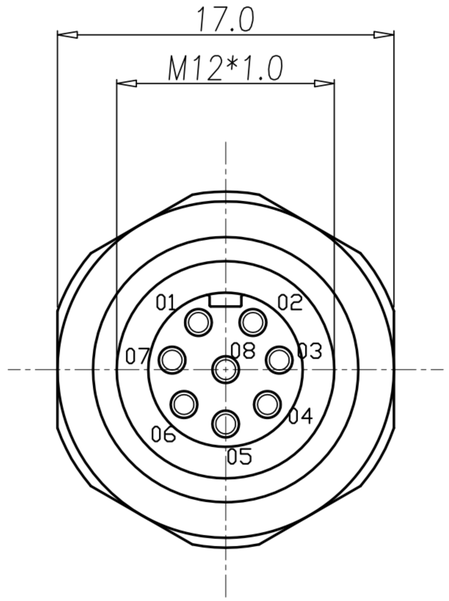

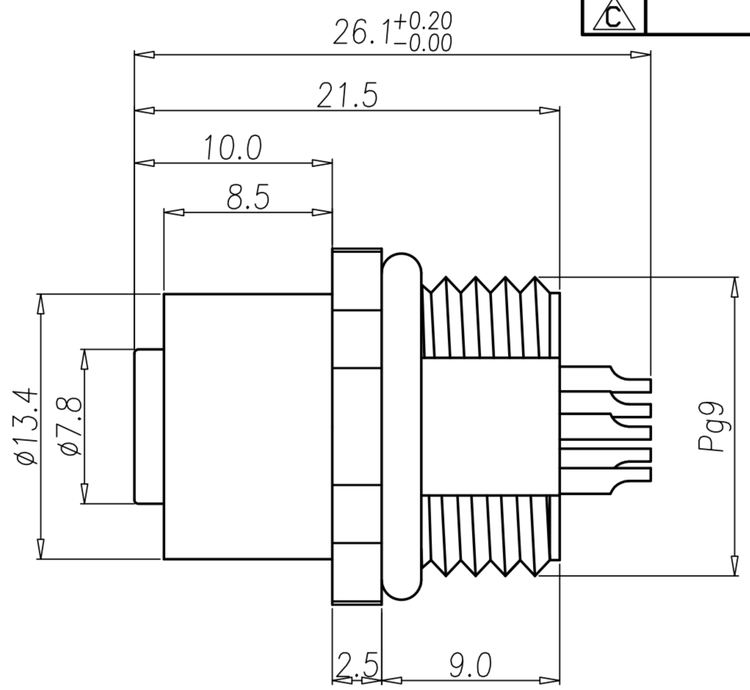

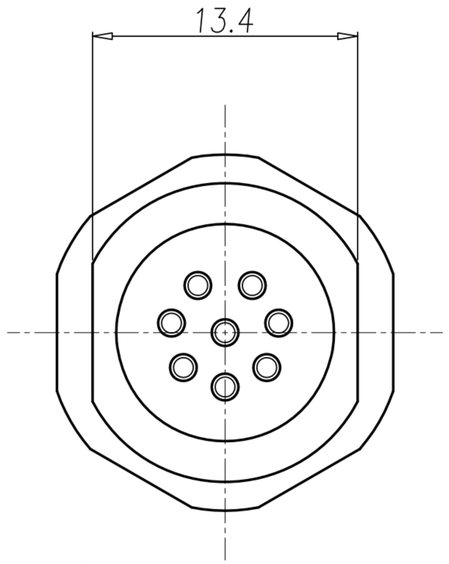

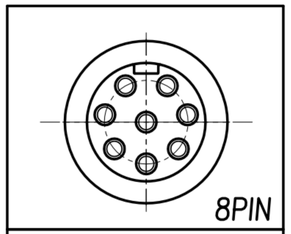

WP−08F2−35
WP−08F2−109−11

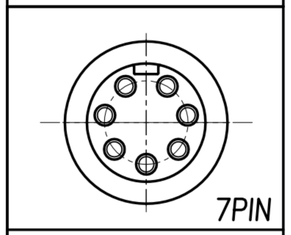

WP−07F2−23−11

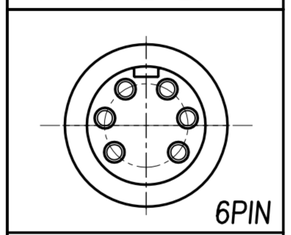

WP−06F2−86−11

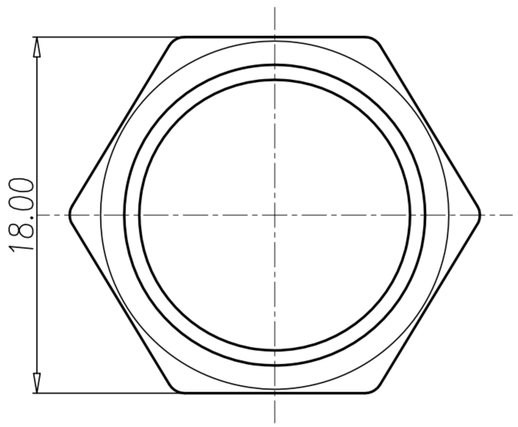

NUT

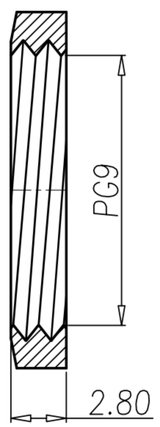

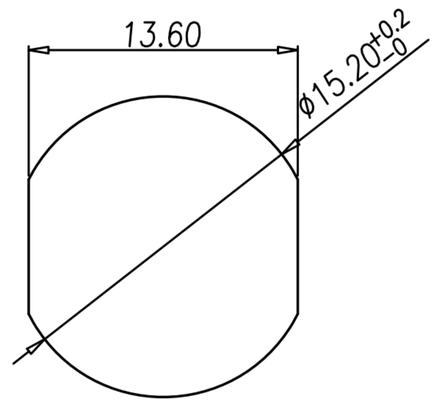

RECOMMENDPANEL CUT-OUT

1. MATERIAL :
   1−1. HOUSING : PBT UL94V−0 ; COLOR : BLACK
   1−2. CONTACT : BRASS
   1−3. SHELL : BRASS
   1−4. NUT : BRASS
   1−5. O−RING : EPDM ; COLOR : BLACK.
2. FINISH :
   2−1. CONTACT : SEE TABLE A
   2−2. SHELL : NICKEL PLATED.
   2−2. NUT : NICKEL PLATED.
3. ELECTRICAL SPECIFICATION :
   3−1. Rated current : 2A
   3−2. Rated Voltage : 30V
   3−3. Water proof : IP67
4. Environmental :
   4−1. Operation Temperature : −40℃~85℃

TABLE A C

PART NO	FINISH
WP−08F2−35	GOLD FLASH
WP−08F2−109−11	GOLD 10u"
WP−07F2−23−11	GOLD FLASH
WP−06F2−86−11	GOLD FLASH

DRAWN	Ku Chou	APP'D	Fido Weng	UNIT	mm	TOLERANCE .x ±0.20 .xx ±0.10 .xxx ±0.05 .xxxx ±0.03 ANGULA ±1°		广东科斯达电子科技有限公司 GUANG DONG KE SI DA ELECTRONIC TECHNOLOGY CO., LTD.	TITLE	WP M12 (F) 板端後鎖PG9洗雙邊焊線式	SHEET 1/1
CHK'D	Emily Suen			SCALE	1:1				PART NO.	SEE TABLE A	DWG NO. QC5956	VERSION C