REV.	DESCRIPTION	APPROVED BY	DATE	ECN NO.
A	RELEASE	Fido Weng	11/12/18'	
B				
C				

CUSTOMER DRAWING

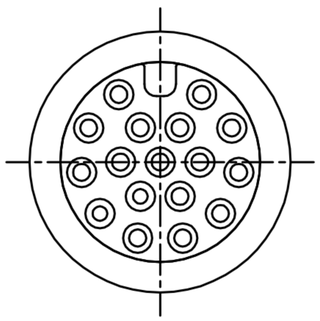

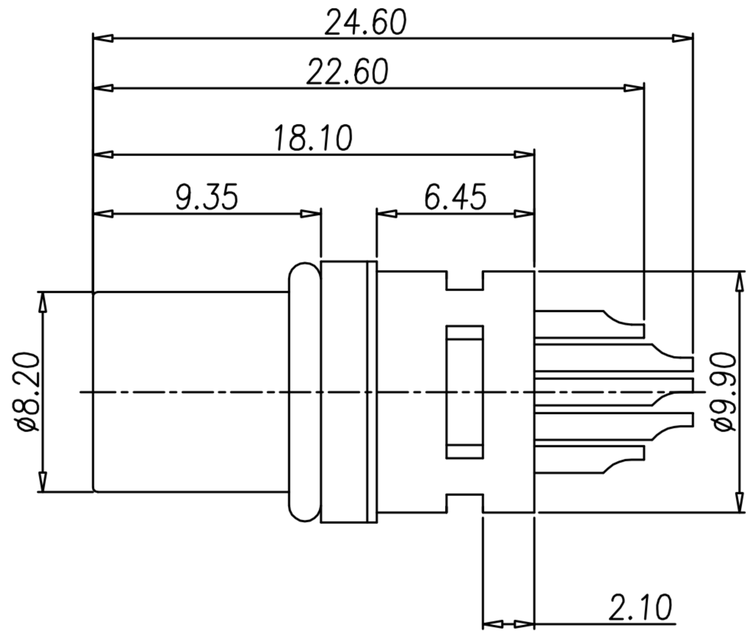

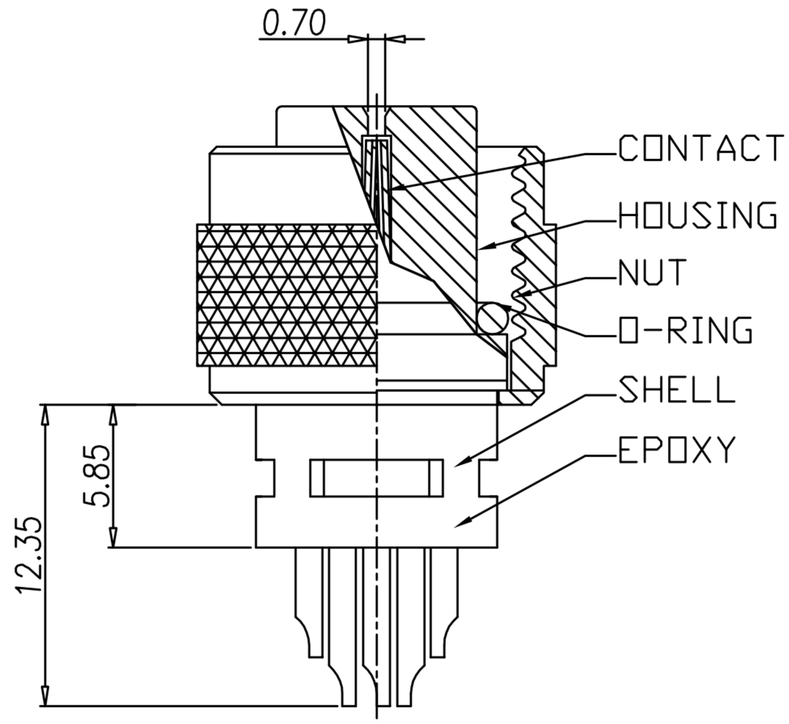

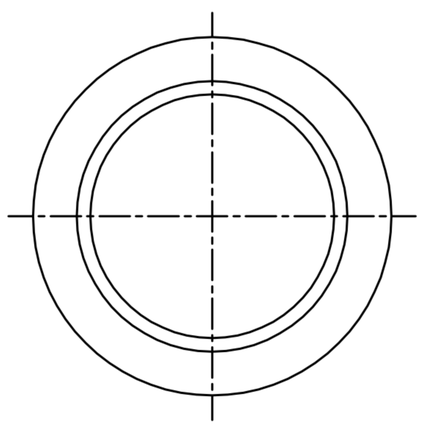

NUT

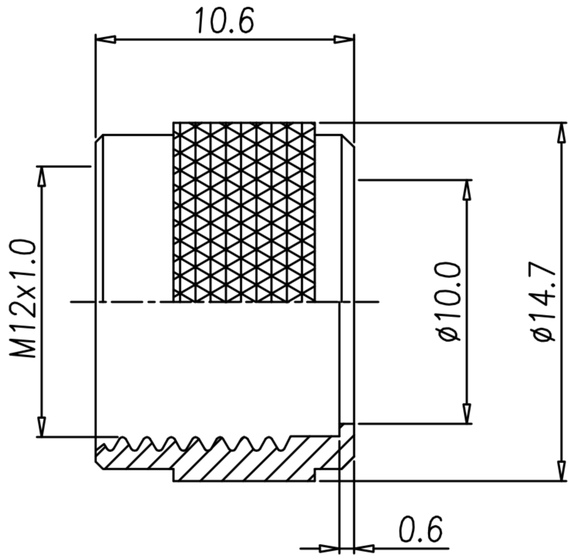

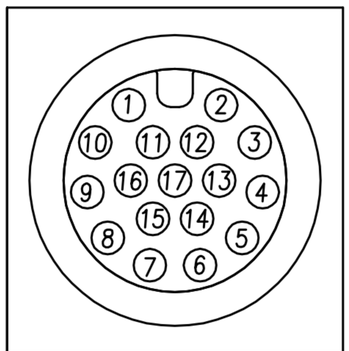

Pin Assignments
Front View

1. MATERIAL :
   1-1. HOUSING : PBT UL94V-0 ; COLOR : BLACK
   1-2. CONTACT : BRASS
   1-3. NUT : BRASS
   1-4. O-RING : EDPM
   1-5. SHELL : BRASS
2. FINISH :
   2-1. CONTACT : 10 MICRO INCHES MIN. GOLD PLATED
   UNDER PLATE : NICKEL
   2-2. NUT : NICKEL PLATED
   2-3. SHELL : BRIGHT TIN PLATED
3. ELECTRICAL SPECIFICATION :
   3-1. Rated current : 1.5A
   3-2. Rated Voltage : 30V
   3-3. Water proof : IP67
4. Environmental :
   4-1. Operation Temperature : -40℃~85℃

DRAWN	Mark Kao	APP'D	Fido Weng	UNIT	mm	TOLERANCE .x ±0.20 .xx ±0.10 .xxx ±0.05 .xxxx ±0.01 ANGULA ±1°	广东科斯达电子科技有限公司 GUANG DONG KE SI DA ELECTRONIC TECHNOLOGY CO., LTD.	TITLE	WP M12 17PIN(F)焊線式(接地剖溝)(螺母壓花寬度5.75)			SHEET 1/1
CHK'D	Emily Suen			SCALE	1:1			PART NO.	WP-17F2-09-11	DWG NO.	QC8853	VERSION A