REV.	DESCRIPTION	APPROVED BY	DATE	ECN NO.
A	RELEASE	Ku Chou	05/09/19'	
B				
C				

CUSTOMER DRAWING

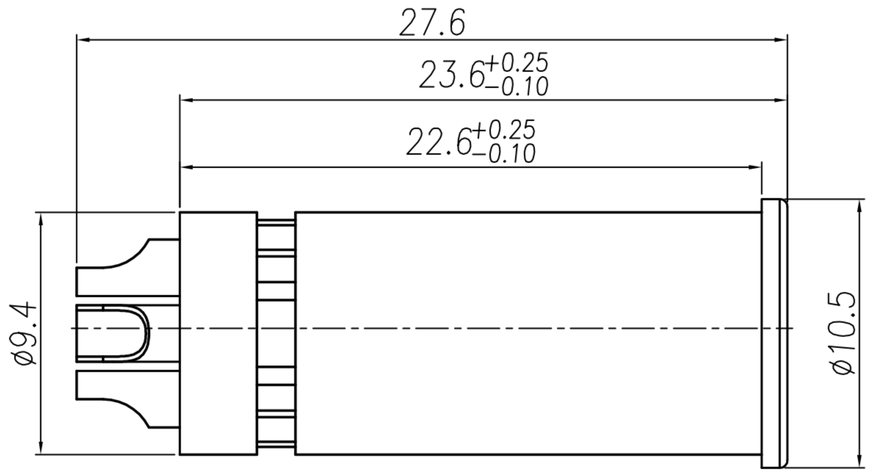

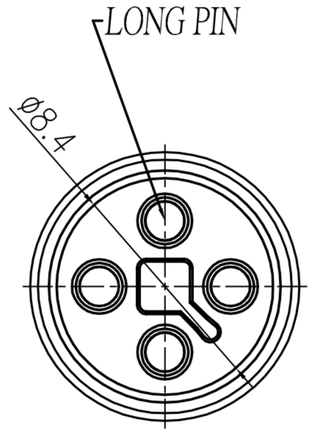

Table A

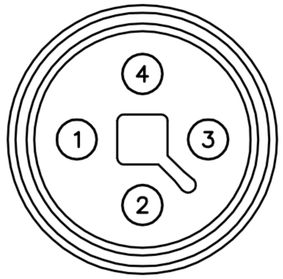	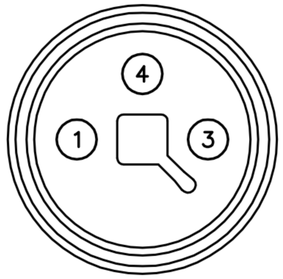	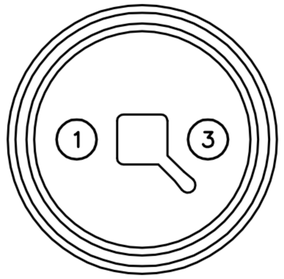
WP−04M2−200−11	WP−03M2−114−11	WP−02M2−64−11

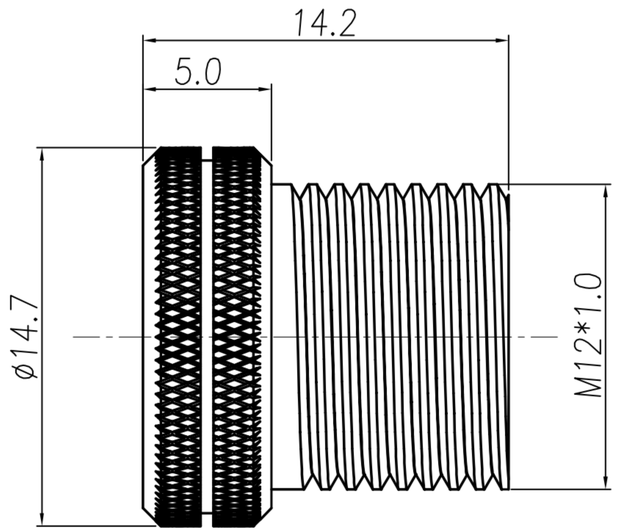

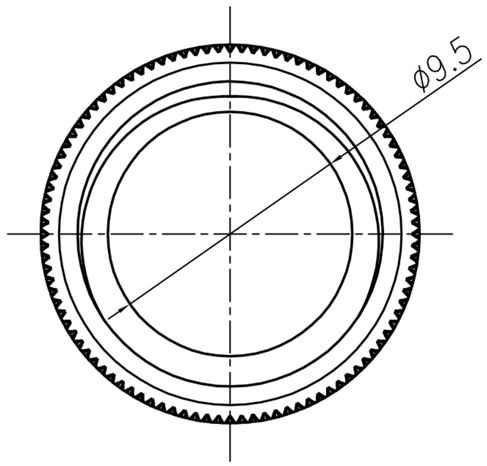

NUT

1. MATERIAL :
   1−1. HOUSING : PA66 UL94V−0 ; COLOR : BLACK
   1−2. CONTACT : BRASS
   1−3. NUT : BRASS
2. FINISH :
   2−1. CONTACT : 10u" MIN. GOLD PLATED
   UNDER PLATE : NICKEL
   2−2. NUT : NICKEL PLATED
3. ELECTRICAL SPECIFICATION :
   3−1. Rated current : 12A
   3−2. Rated Voltage : 63V
   3−3. Water proof: IP67/68
4. Environmental :
   4−1. Operation Temperature : −40℃~105℃

DRAWN	Emily Suen	APP'D	Ku Chou	UNIT	mm	TOLERANCE .x ±0.20 .xx ±0.10 .xxx ±0.05 .xxxx ±0.03 ANGULA ±1°	广东科斯达电子科技有限公司 GUANG DONG KE SI DA ELECTRONIC TECHNOLOGY CO., LTD.	TITLE	M12 T−CODING (M) 成形焊線式		SHEET 1/1
CHK'D	Ku Chou			SCALE	1:1			PART NO.	SEE TABLE A	DWG NO. QC9509	VERSION A