# CUSTOMER DRAWING

| REV. | DESCRIPTION | APPROVED BY | DATE | ECN NO. |
|---|---|---|---|---|
| A | RELEASE | Fido Weng | 12/04/06' | |
| B | ADD P/N | Ku Chou | 12/11/19' | |
| C | | | | |

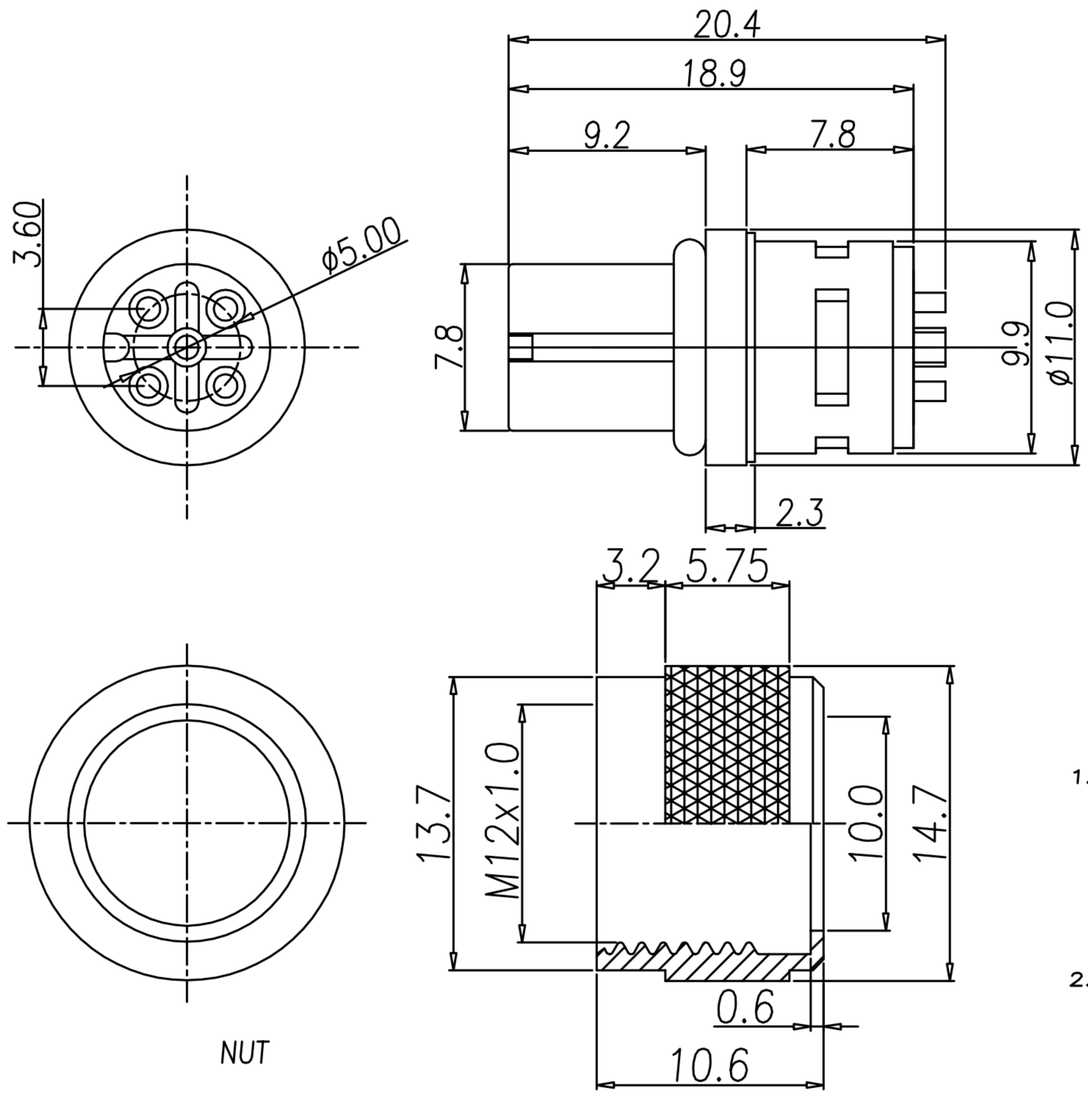


TABLE A

| | P/N | MATERIAL | |
|---|---|---|---|
| | WP-05F2-123-11 | NYLON 66 | 5PIN |
| B | WP-05F2-191-11 | PBT | 5PIN |
| | WP-04F2-176-11 | NYLON 66 | 4PIN |
| B | WP-04F2-249-11 | PBT | 4PIN |
| B | WP-03F2-136-11 | PBT | 3PIN |
| B | WP-03F2-137-11 | PBT | 3PIN |
| B | WP-02F2-79-11 | PBT | 2PIN |

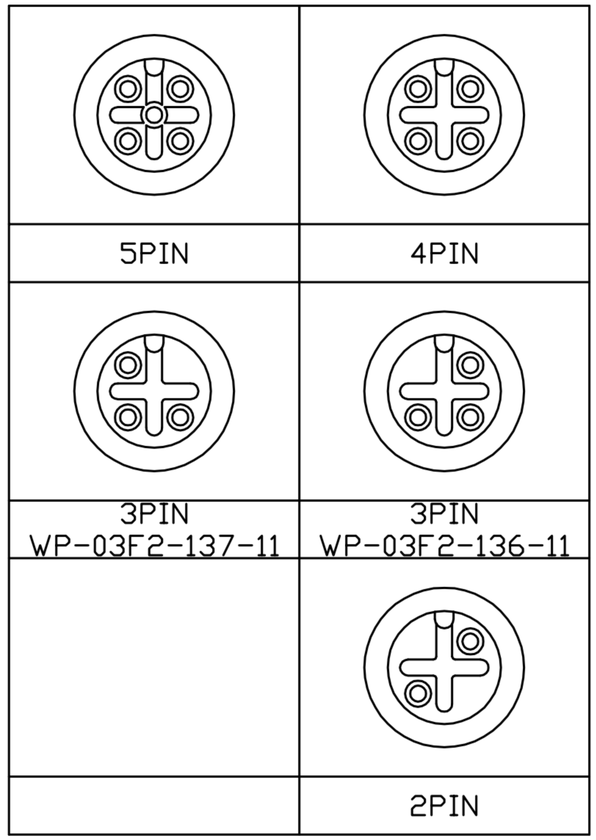


1. MATERIAL :
   - 1-1. HOUSING : SEE TABLE A ; COLOR : BLACK
   - 1-2. CONTACT : BRASS
   - 1-3. NUT : BRASS
   - 1-4. O-RING : EPDM; COLOR : BLACK(7.5*1.5)
   - 1-5. SHELL : BRASS
2. FINISH :
   - 2-1. CONTACT : 10u" MIN. GOLD PLATED
     UNDER PLATE : NICKEL
   - 2-2.NUT : NICKEL
   - 2-3. SHELL : BRIGHT TIN
3. ELECTRICAL SPECIFICATION :
   - 3-1. Rated current : 4A
   - 3-2. Rated Voltage : 2PIN~4PIN 250V ; 5PIN 60V
   - 3-3. Water proof: IP68
4. Environmental :
   - 4-1. Operation Temperature : -40℃~105℃

| | | | | | | | | | | | |
|---|---|---|---|---|---|---|---|---|---|---|---|
| DRAWN | Emily Suen | APP'D | Ku Chou | UNIT | mm | TOLERANCE .x ±0.20 .xx ±0.10 .xxx ±0.05 .xxxx ±0.03 ANGULA ±1° | 广东科斯达电子科技有限公司 GUANG DONG KE SI DA ELECTRONIC TECHNOLOGY CO., LTD. | TITLE | WP M12 (F)焊線式螺母壓花(接地剖溝) | | SHEET 1/1 |
| CHK'D | Ku Chou | | | SCALE | 1:1 | | | PART NO. | SEE TABLE A | DWG NO. QC7553 | VERSION B |