| REV. | DESCRIPTION | APPROVED BY | DATE | ECN NO. |
|---|---|---|---|---|
| A | RELEASE | Ku Chou | 25/06/18' | |
| B | | | | |
| C | | | | |

# CUSTOMER DRAWING

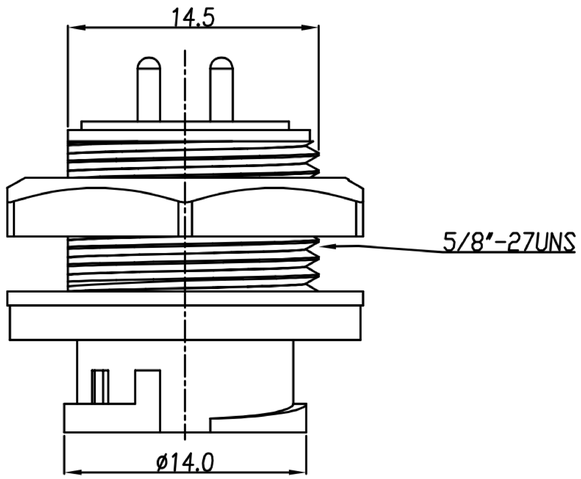


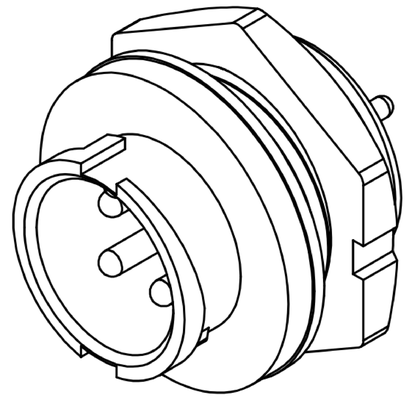

TABLE A

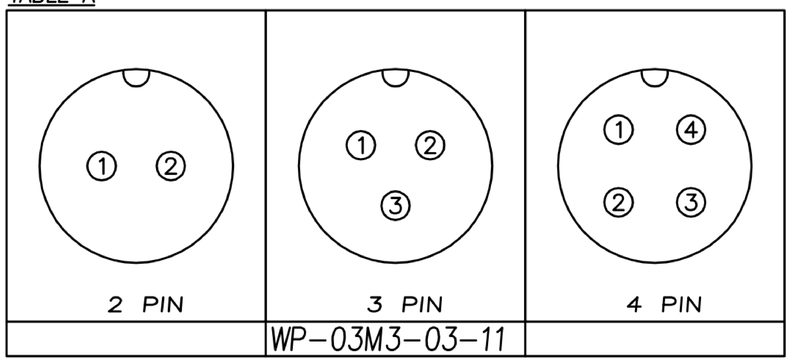


PIN ASSIGMENTS
FRONT VIEW

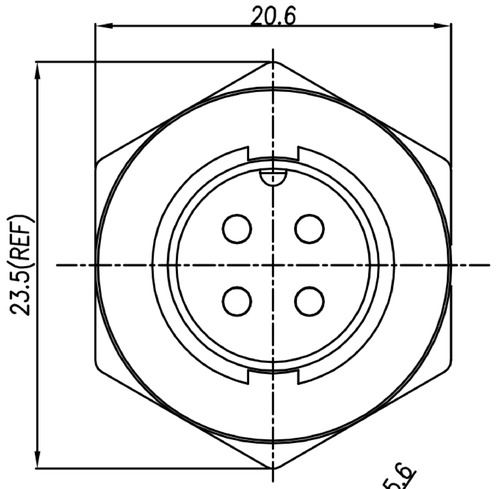


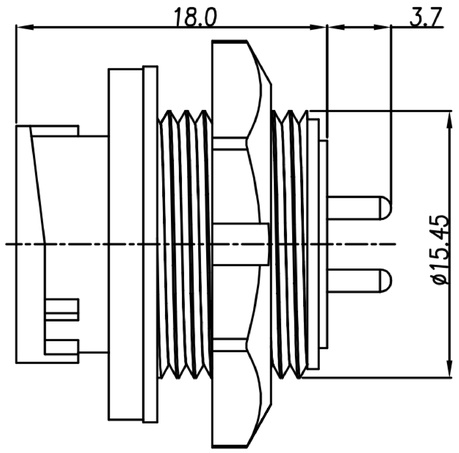


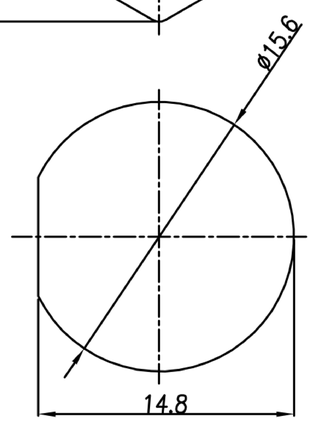


RECOMMENDED PANEL CUT-OUT

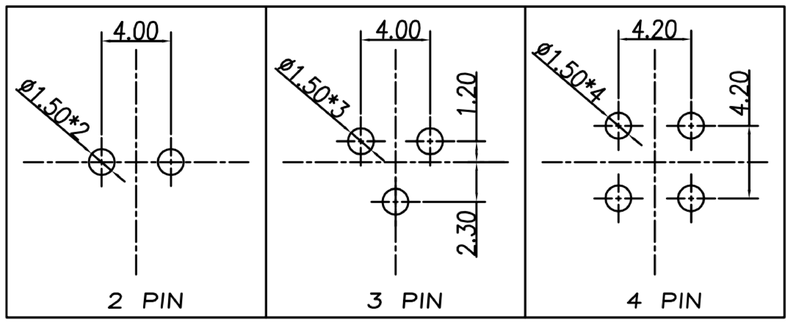


PCB LAYOUT

1. MATERIAL :
   - 1-1. HOUSING : PA66
   - 1-2. CONTACT : BRASS
   - 1-3. GASKET : SILICONE
   - 1-4. HEX NUT : PA66
2. FINISH :
   - 2-1. CONTACT : GOLD FLASH PLATED.
3. ELECTRICAL SPECIFICATION :
   - 3-1. Rated current : 10A
   - 3-2. Rated voltage : 250V
   - 3-3. Water proof : IP67
4. Environmental :
   - 4-1. Operation Temperature : -40℃~105℃

| | | | | | | | | | | | |
|---|---|---|---|---|---|---|---|---|---|---|---|
| DRAWN | Emily Suen | APP'D | Ku Chou | UNIT | mm | TOLERANCE .x ±0.20 .xx ±0.10 .xxx ±0.05 .xxxx ±0.03 ANGULA ±1° | 广东科斯达电子科技有限公司 GUANG DONG KE SI DA ELECTRONIC TECHNOLOGY CO., LTD. | TITLE | WP (M) (LOCK) B SIZE 後鎖DIP式 | | SHEET 1/1 |
| CHK'D | Ku Chou | | | SCALE | 1:1 | | | PART NO. | SEE TABLE A | DWG NO. QC8437 | VERSION A |