CUSTOMER DRAWING

REV.	DESCRIPTION	APPROVED BY	DATE	ECN NO.
A	RELEASE	LEO	23/11/23'	
B				
C				

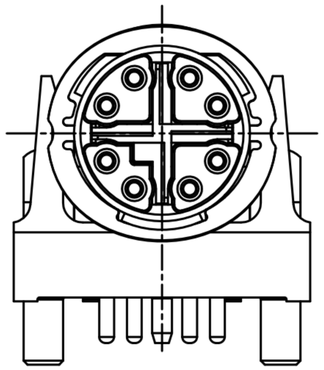

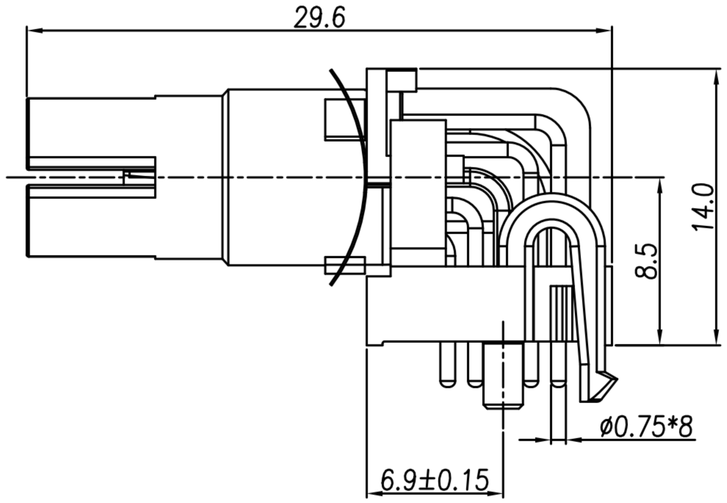

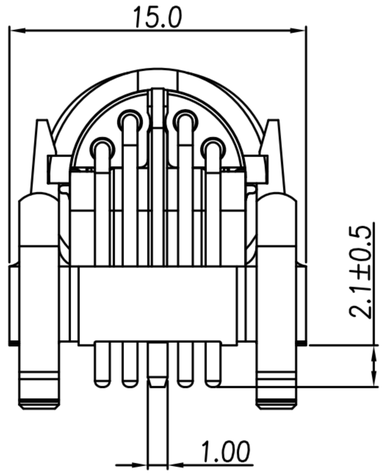

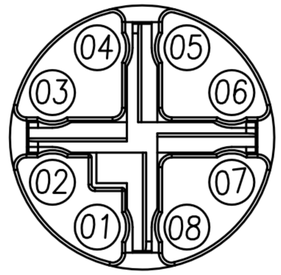

Pin Assignments

*Depends on selected housing thread

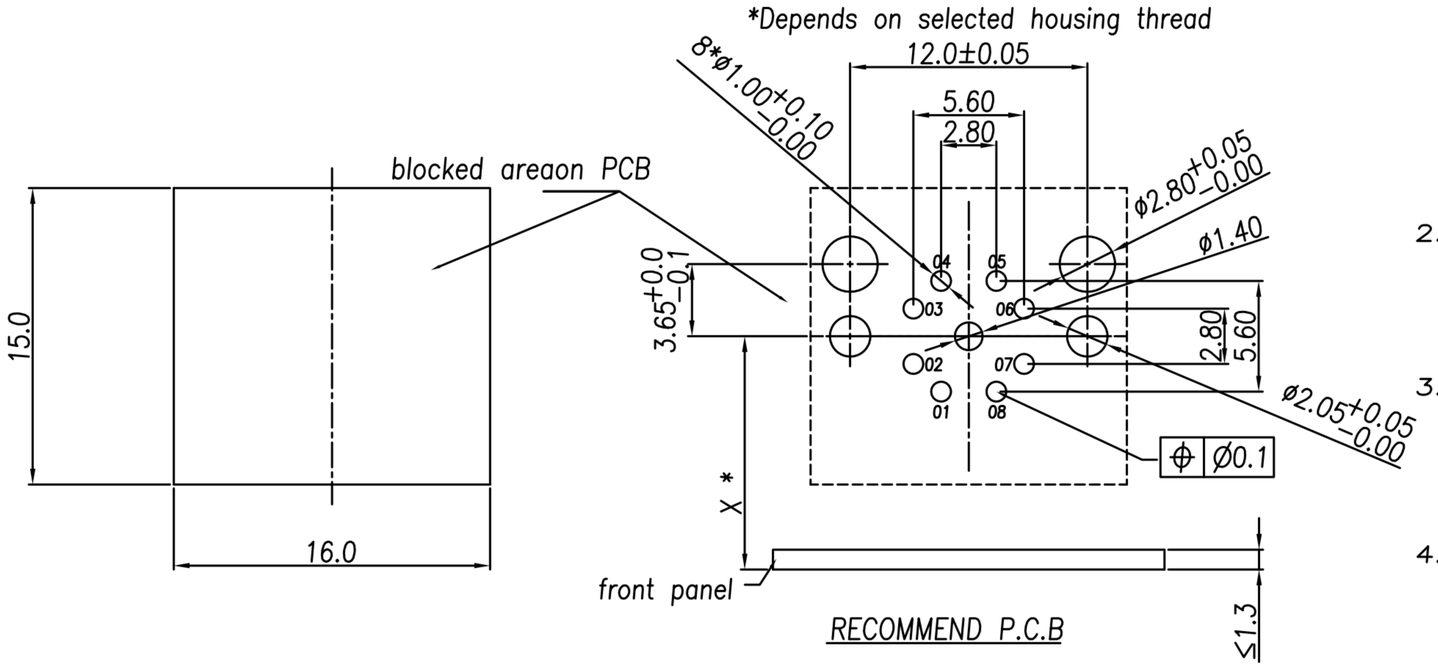

RECOMMEND P.C.B

1. MATERIAL :
   - 1-1. HOUSING : PA9T
   - 1-2. CONTACT : BRASS
   - 1-3. X-SHELL : Zn ALLOY
   - 1-4. BACK HOUSING : PA9T
   - 1-5. DOWN HOUSING : PA9T
   - 1-6. GROUND : PHOSPHOR BRONZE
2. FINISH :
   - 2-1. CONTACT : GOLD FLASH PLATED.
   - 2-2. GROUND : NICKEL PLATED.
   - 2-3. X-SHELL : NICKEL PLATED
3. ELECTRICAL SPECIFICATION :
   - 3-1. Rated current : 0.5A
   - 3-2. Rated Voltage : 50V AC/60V DC
   - 3-3. Water proof : IP67 (in mated condition)
4. Environmental :
   - 4-1. Operation Temperature : -25℃~85℃

DRAWN	LEO	APP'D	Ku Chou	UNIT	mm	TOLERANCE .x ±0.20 .xx ±0.10 .xxx ±0.05 .xxxx ±0.03 ANGULAR ±1°	广东科斯达电子科技有限公司 GUANG DONG KE SI DA ELECTRONIC TECHNOLOGY CO., LTD.	TITLE	WP M12 X-CODING 8P (F) Two-piece 90度			SHEET 1/1
CHK'D	Ku Chou			SCALE	1:1			PART NO.	WP-08F2-149-11	DWG NO.	QC10947	VERSION A