REV.	DESCRIPTION	APPROVED BY	DATE	ECN NO.
A	RELEASE	Ku Chou	25/06/18'	
B				
C				

CUSTOMER DRAWING

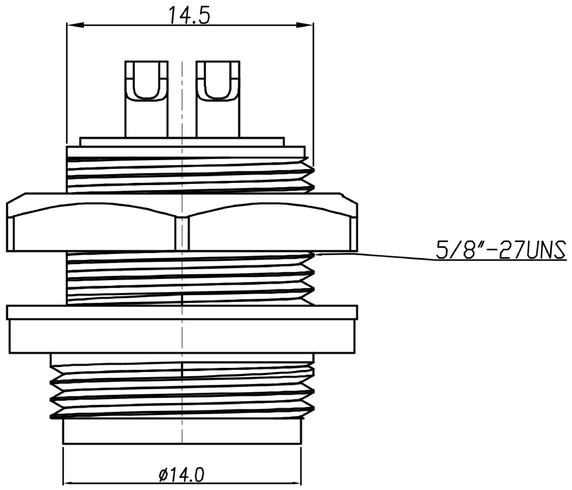

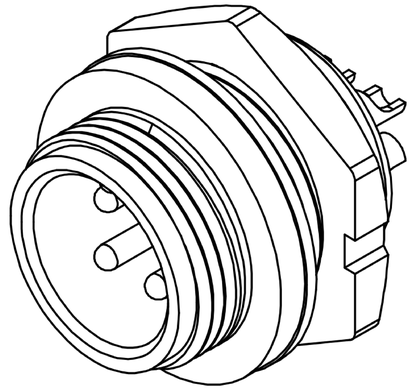

TABLE A

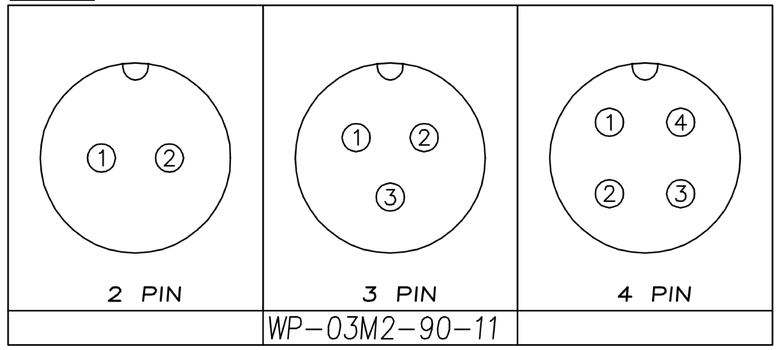

PIN ASSIGMENTS
FRONT VIEW

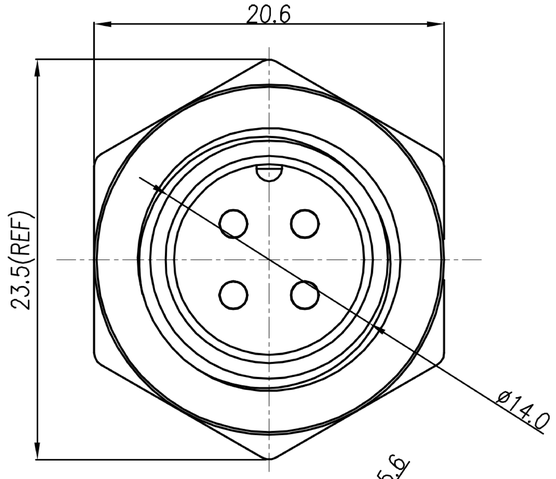

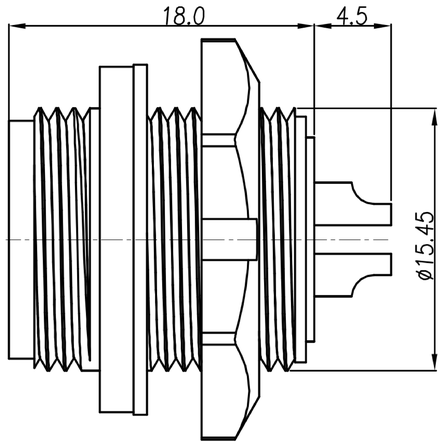

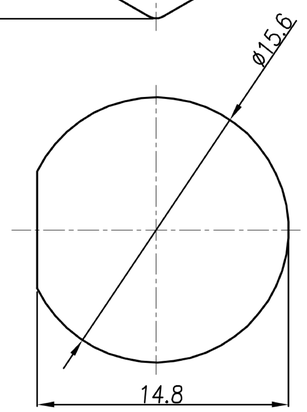

RECOMMENDED PANEL CUT-OUT

1. MATERIAL :
   1-1. HOUSING : PA66
   1-2. CONTACT : BRASS
   1-3. GASKET : EPDM
   1-4. HEX NUT : PA66
2. FINISH :
   2-1. CONTACT : GOLD FLASH PLATED.
3. ELECTRICAL SPECIFICATION :
   3-1. Rated current : 10A
   3-2. Rated voltage : 250V
   3-3. Water proof : IP67
4. Environmental :
   4-1. Operation Temperature : -40℃~105℃

DRAWN	Emily Suen	APP'D	Ku Chou	UNIT	mm	TOLERANCE .x ±0.20 .xx ±0.10 .xxx ±0.05 .xxxx ±0.03 ANGULA ±1°		广东科斯达电子科技有限公司 GUANG DONG KE SI DA ELECTRONIC TECHNOLOGY CO., LTD.	TITLE	WP (M) (SCREW) B SIZE 後鎖焊線式		SHEET 1/1
CHK'D	Ku Chou			SCALE	1:1				PART NO.	SEE TABLE A	DWG NO. QC8433	VERSION A